ACS150

User's Manual
ACS150 Drives (0.37…4 kW, 0.5…5 hp)

ACS150 Drive manuals

OPTION MANUALS (delivered with optional equipment and available in Internet)

MUL1-R1 Installation instructions for ACS150 and ACS350
3AFE68642868 (EN)

MFDT-01 FlashDrop User's Manual
3AFE68591074 (EN)

MAINTENANCE MANUALS (available in Internet)

Guide for Capacitor Reforming in ACS50, ACS55, ACS150, ACS350, ACS550 and ACH550
3AFE68735190 (English)

ACS150 Drives
0.37…4 kW
0.5…5 hp

User's Manual

3AFE68576032 Rev B
EN
EFFECTIVE: 12.9.2007

© 2007 ABB Oy. All Rights Reserved.

Safety

What this chapter contains

The chapter contains the safety instructions which you must follow when installing, operating and servicing the drive. If ignored, physical injury or death may follow, or damage may occur to the drive, motor or driven equipment. Read the safety instructions before you work on the drive.

Use of warning symbols

There are two types of safety warnings throughout this manual:

Danger; electricity warns of high voltage which can cause physical injury and/or damage to the equipment.

General danger warns about conditions, other than those caused by electricity, which can result in physical injury and/or damage to the equipment.

Installation and maintenance work

These warnings are intended for all who work on the drive, motor cable or motor.

WARNING! Ignoring the following instructions can cause physical injury or death, or damage to the equipment.

Only qualified electricians are allowed to install and maintain the drive!

- Never work on the drive, motor cable or motor when input power is applied. After disconnecting the input power, always wait for 5 minutes to let the intermediate circuit capacitors discharge before you start working on the drive, motor or motor cable.

  Always ensure by measuring with a multimeter (impedance at least 1 Mohm) that:
  1. There is no voltage between the drive input phases U1, V1 and W1 and the ground.
  2. There is no voltage between terminals BRK+ and BRK- and the ground.
- Do not work on the control cables when power is applied to the drive or to the external control circuits. Externally supplied control circuits may carry dangerous voltage even when the input power of the drive is switched off.
- Do not make any insulation or voltage withstand tests on the drive.

Note:

- Even when the motor is stopped, dangerous voltage is present at the power circuit terminals U1, V1, W1 and U2, V2, W2 and BRK+ and BRK-.

WARNING! Ignoring the following instructions can cause physical injury or death, or damage to the equipment.

- The drive is not field repairable. Never attempt to repair a malfunctioning drive; contact your local ABB representative or Authorized Service Center for replacement.
- Make sure that dust from drilling does not enter the drive during the installation. Electrically conductive dust inside the drive may cause damage or lead to malfunction.
- Ensure sufficient cooling.

Operation and start-up

These warnings are intended for all who plan the operation, start up or operate the drive.

WARNING! Ignoring the following instructions can cause physical injury or death, or damage to the equipment.

- Before adjusting the drive and putting it into service, make sure that the motor and all driven equipment are suitable for operation throughout the speed range provided by the drive. The drive can be adjusted to operate the motor at speeds above and below the speed provided by connecting the motor directly to the power line.
- Do not activate automatic fault reset functions if dangerous situations can occur. When activated, these functions will reset the drive and resume operation after a fault.
- Do not control the motor with an AC contactor or disconnecting device (disconnecting means); use instead the control panel start and stop keys and or external commands (I/O). The maximum allowed number of charging cycles of the DC capacitors (i.e. power-ups by applying power) is two per minute and the maximum total number of chargings is 15 000.

Note:

- If an external source for start command is selected and it is ON, the drive will start immediately after an input voltage break or fault reset unless the drive is configured for 3-wire (a pulse) start/stop.
- When the control location is not set to local (LOC not shown in the display), the stop key on the control panel will not stop the drive. To stop the drive using the control panel, press the LOC/REM key and then the stop key .

Table of contents

ACS150 Drive manuals 2

Safety

What this chapter contains 5
Use of warning symbols 5
Installation and maintenance work 5
Operation and start-up 6

Table of contents

About the manual

What this chapter contains 13
Compatibility 13
Intended audience 13
Categorization according to the frame size 13
Product and service inquiries 13
Product training 13
Providing feedback on ABB Drives manuals 13
Installation and commissioning flowchart 14

Hardware description

What this chapter contains 15
Overview 15
Overview: Connections and switch 16
Type code 17

Mechanical installation

What this chapter contains 19
Unpacking the drive 19
Delivery check 20
Before installation 20
Requirements for the installation site 20
Wall 20
Floor 20
Free space around the drive 21
Mounting the drive 21
Mount the drive 21
With screws 21
On DIN rail 21
Fasten clamping plates 22

Planning electrical installation

What this chapter contains . . . 23
Motor selection . . . 23
AC power line connection . . . 23
Supply disconnecting device . . . 23
Thermal overload and short-circuit protection . . . 24
Protection against short-circuit inside the drive or in the supply cable . . . 24
Protection against short-circuit in the motor and motor cable . . . 24
Thermal overload protection of the motor . . . 25
Selecting the power cables . . . 26
General rules . . . 26
Alternative power cable types . . . 26
Motor cable shield . . . 27
Additional US requirements . . . 27
Conduit . . . 27
Armored cable / shielded power cable . . . 27
Protecting the relay output contact and attenuating disturbances in case of inductive loads . . . 28
Residual current device (RCD) compatibility . . . 28
Selecting the control cables . . . 28
Relay cable . . . 29
Routing the cables . . . 29
Control cable ducts . . . 30

Electrical installation

What this chapter contains . . . 31
Checking the insulation of the assembly . . . 31
Drive . . . 31
Input cable . . . 31
Motor and motor cable . . . 31
Connecting the power cables . . . 32
Connection diagram . . . 32
Procedure . . . 33
Connecting the control cables . . . 34
I/O terminals . . . 34
Procedure . . . 35

Installation checklist

Checklist . . . 37

Start-up and control with I/O

What this chapter contains . . . 39
How to start up the drive . . . 39
How to control the drive through the I/O interface . . . 43

Control panel

What this chapter contains . . . 45
Integrated Control Panel . . . 45
Overview . . . 46
Operation . . . 47
How to do common tasks . . . 48
How to start, stop and switch between local and remote control . . . 49
How to change the direction of the motor rotation . . . 49
How to set the frequency reference . . . 50
Output mode . . . 51
How to browse the monitored signals . . . 51
Reference mode . . . 52
How to view and set the frequency reference . . . 52
Parameter modes . . . 53
How to select a parameter and change its value . . . 53
How to select the monitored signals . . . 54
Changed Parameters mode . . . 55
How to view and edit changed parameters . . . 55

Application macros

What this chapter contains . . . 57
Overview of macros . . . 57
Summary of I/O connections of application macros . . . 58
ABB Standard macro . . . 59
Default I/O connections . . . 59
3-wire macro . . . 60
Default I/O connections . . . 60
Alternate macro . . . 61
Default I/O connections . . . 61
Motor Potentiometer macro . . . 62
Default I/O connections . . . 62
Hand/Auto macro . . . 63
Default I/O connections . . . 63

Actual signals and parameters

What this chapter contains . . . 65
Terms and abbreviations . . . 65
Default parameter values with different macros . . . 65
Parameters in the Short Parameter mode . . . 66
99 START-UP DATA . . . 66
04 FAULT HISTORY . . . 67
11 REFERENCE SELECT . . . 67
12 CONSTANT SPEEDS . . . 67
13 ANALOG INPUTS . . . 68
20 LIMITS . . . 68
21 START/STOP . . . 68
22 ACCEL/DECEL . . . 68

Actual signals 70
01 OPERATING DATA 70
04 FAULT HISTORY 71
Parameters in the Long Parameter mode 72
10 START/STOP/DIR 72
11 REFERENCE SELECT 74
12 CONSTANT SPEEDS 77
13 ANALOG INPUTS 79
14 RELAY OUTPUTS 79
16 SYSTEM CONTROLS 81
18 FREQ INPUT 82
20 LIMITS 83
21 START/STOP 84
22 ACCEL/DECEL 86
25 CRITICAL SPEEDS 89
26 MOTOR CONTROL 89
30 FAULT FUNCTIONS 91
31 AUTOMATIC RESET 95
32 SUPERVISION 97
33 INFORMATION 98
34 PANEL DISPLAY 99
99 START-UP DATA 102

Fault tracing

What this chapter contains 105
Safety 105
Alarm and fault indications 105
How to reset 105
Fault history 105
Alarm messages generated by the drive 106
Fault messages generated by the drive 108

Maintenance

What this chapter contains 111
Safety 111
Maintenance intervals 111
Fan 111
Fan replacement (R1 and R2) 112
Capacitors 112
Reforming 112
Control panel 112
Cleaning 112

Technical data

What this chapter contains 113
Ratings 113

Current and power . . . 113
Symbols . . . 114
Sizing . . . 114
Derating . . . 114
Temperature derating . . . 114
Altitude derating . . . 114
Switching frequency derating . . . 114
Cooling air flow requirements . . . 115
Power cable sizes and fuses . . . 116
Power cables: terminal sizes, maximum cable diameters and tightening torques . . . 118
Dimensions, weights and noise . . . 118
Symbols . . . 118
Input power connection . . . 119
Motor connection . . . 119
Control connections . . . 120
Brake resistor connection . . . 120
Efficiency . . . 120
Cooling . . . 120
Degrees of protection . . . 120
Ambient conditions . . . 121
Materials . . . 121
CE marking . . . 122
Compliance with the EMC Directive . . . 122
Compliance with EN 61800-3 (2004) . . . 122
C-Tick marking . . . 122
Compliance with IEC 61800-3 (2004) . . . 122
RoHS marking . . . 122
Applicable standards . . . 122
UL marking . . . 123
UL checklist . . . 123
IEC/EN 61800-3 (2004) Definitions . . . 123
Compliance with the IEC/EN 61800-3 (2004) . . . 124
First environment (drives of category C2) . . . 124
Second environment (drives of category C3) . . . 124
Product protection in the USA . . . 124
Brake resistors . . . 125
Brake resistor selection . . . 125
Resistor installation and wiring . . . 126
Mandatory circuit protection . . . 127
Parameter set-up . . . 127

Dimensions

Frame sizes R0 and R1, IP20 (cabinet installation) / UL open . . . 130
Frame sizes R0 and R1, IP20 / NEMA 1 . . . 131
Frame size R2, IP20 (cabinet installation) / UL open . . . 132
Frame size R2, IP20 / NEMA 1 . . . 133

About the manual

What this chapter contains

The chapter describes the intended audience and compatibility of this manual. It also contains a flowchart of steps for checking the delivery and installing and commissioning the drive. The flowchart refers to chapters/sections in this manual.

Compatibility

The manual is compatible with the ACS150 drive firmware version 1.30b or later. See parameter *3301* FIRMWARE.

Intended audience

This manual is intended for persons who plan the installation, install, commission, use and service the drive. Read the manual before working on the drive. The reader is expected to know the fundamentals of electricity, wiring, electrical components and electrical schematic symbols.

This manual is written for readers worldwide. Both SI and imperial units are shown. Special US instructions for installations in the United States are given.

Categorization according to the frame size

The ACS150 is manufactured in frame sizes R0...R2. Some instructions, technical data and dimensional drawings which only concern certain frame sizes are marked with the symbol of the frame size (R0...R2). To identify the frame size of your drive, see the rating table on page *113* in chapter *Technical data*.

Product and service inquiries

Address any inquiries about the product to your local ABB representative, quoting the type code and serial number of the unit in question. A listing of ABB sales, support and service contacts can be found by navigating to www.abb.com/drives and selecting *Drives – Sales, Support and Service network*.

Product training

For information on ABB product training, navigate to www.abb.com/drives and select *Drives – Training courses*.

Providing feedback on ABB Drives manuals

Your comments on our manuals are welcome. Go to www.abb.com/drives, then select successively *Drives – Document Library – Manuals feedback form*.

Installation and commissioning flowchart

Task	See
Identify the frame size of your drive: R0…R2.	*Technical data*: *Ratings* on page *113*
Plan the installation: select the cables, etc. Check the ambient conditions, ratings and required cooling air flow.	*Planning electrical installation* on page *23* *Technical data* on page *113*
Unpack and check the drive.	*Mechanical installation: Unpacking the drive* on page *19*
If the drive will be connected to an IT (ungrounded) or corner grounded system, check that the internal EMC filter is not connected.	*Hardware description: Type code* on page *17* *Electrical installation: Connecting the power cables* on page *32*
Install the drive on a wall or in a cabinet.	*Mechanical installation* on page *19*
Route the cables.	*Planning electrical installation*: *Routing the cables* on page *29*
Check the insulation of the input cable and the motor and the motor cable.	*Electrical installation: Checking the insulation of the assembly* on page *31*
Connect the power cables.	*Electrical installation: Connecting the power cables* on page *32*
Connect the control cables.	*Electrical installation: Connecting the control cables* on page *34*
Check the installation.	*Installation checklist* on page *37*
Commission the drive.	*Start-up and control with I/O* on page *39*

Hardware description

What this chapter contains

The chapter describes the construction and type code information in short.

Overview

The ACS150 is a wall or cabinet mountable drive for controlling AC motors. The construction of frame sizes R0…R2 varies to some extent.

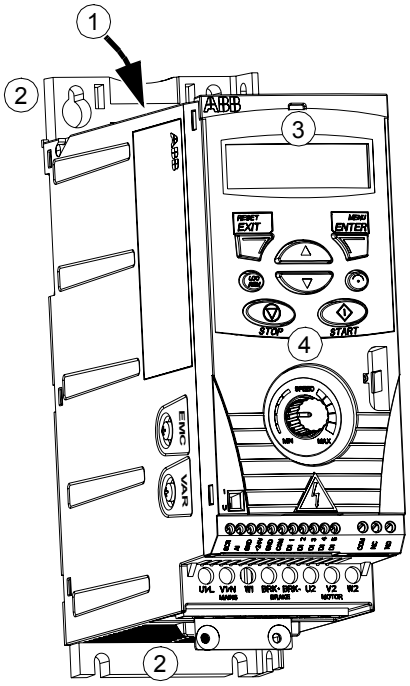

Without plates (R0 and R1)

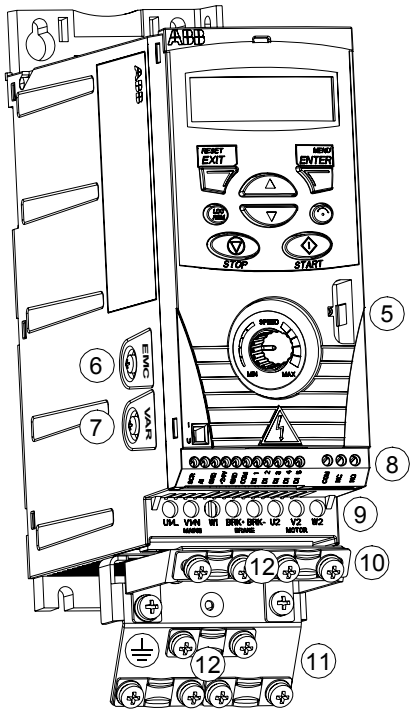

With plates (R0 and R1)

1	Cooling outlet through top cover
2	Mounting holes
3	Integrated Control Panel
4	Integrated potentiometer

5	FlashDrop connection
6	EMC filter grounding screw (EMC)
7	Varistor grounding screw (VAR)
8	I/O connections
9	Input power connection (U1, V1, W1), brake resistor connection (BRK+, BRK-) and motor connection (U2, V2, W2)
10	I/O clamping plate
11	Clamping plate
12	Clamps

Overview: Connections and switch

The diagram shows the connections and switch of the ACS150.

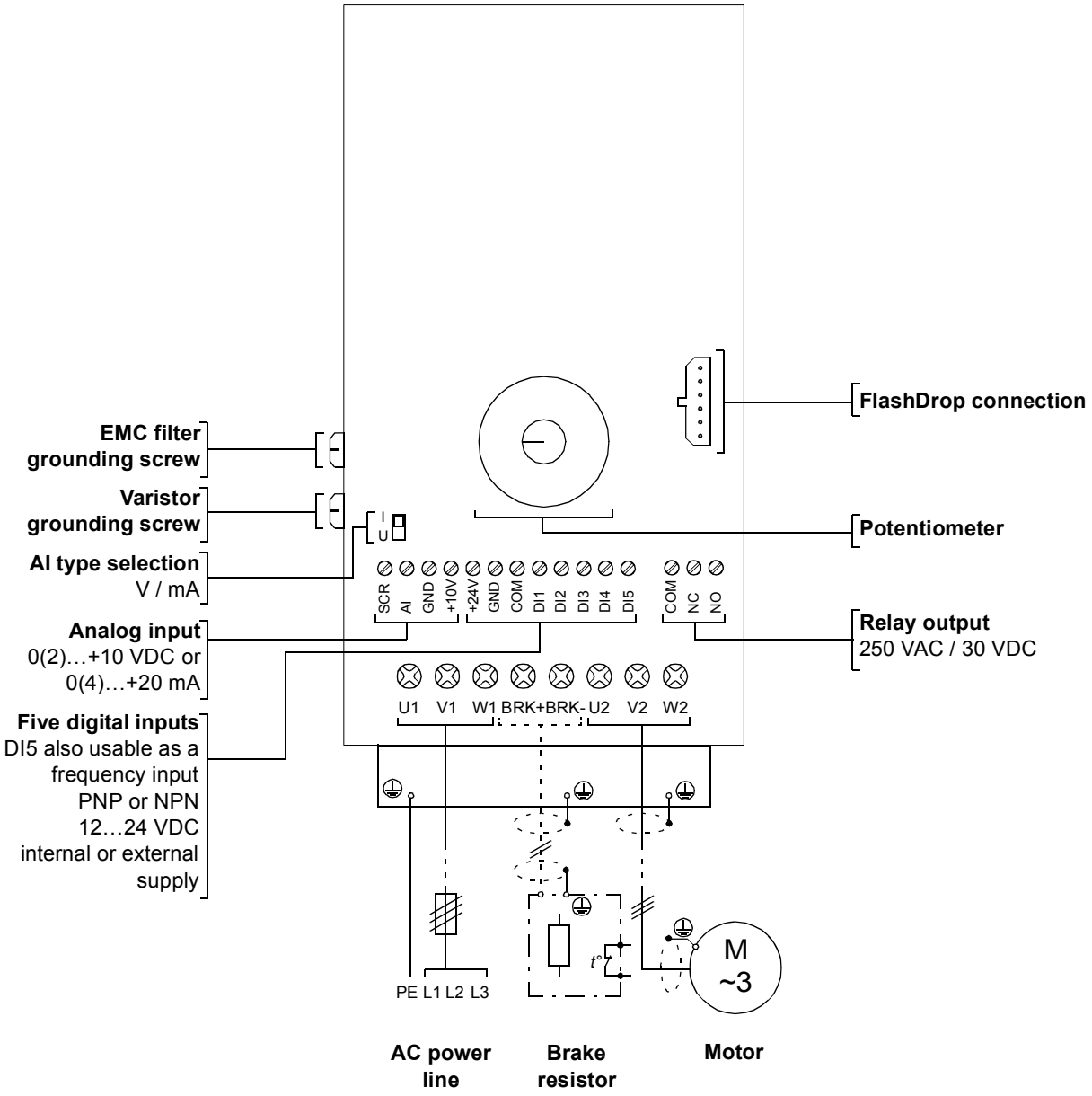

Type code

The type code contains information on the specifications and configuration of the drive. You find the type code on the type designation label attached to the drive. The first digits from the left express the basic configuration, for example ACS150-03E-08A8-4. The explanations of the type code selections are described below.

ACS150-03E-08A8-4

ACS150 product series

1-phase/3-phase
01 = 1-phase input
03 = 3-phase input

Configuration
E = EMC filter connected, 50 Hz frequency
U = EMC filter disconnected, 60 Hz frequency

Output current rating
In format xxAy, where xx indicates the integer part and y the fractional part, e.g. 08A8 means 8.8 A.
For more information, see section *Ratings* on page *113*.

Input voltage range
2 = 200…240 VAC
4 = 380…480 VAC

Mechanical installation

What this chapter contains

The chapter describes the mechanical installation procedure of the drive.

Unpacking the drive

The drive (1) is delivered in a package that also contains the following items (frame size R0 shown in the figure):

- plastic bag (2) including clamping plate, I/O clamping plate, clamps and screws
- mounting template, integrated into the package (3)
- user's manual (4).

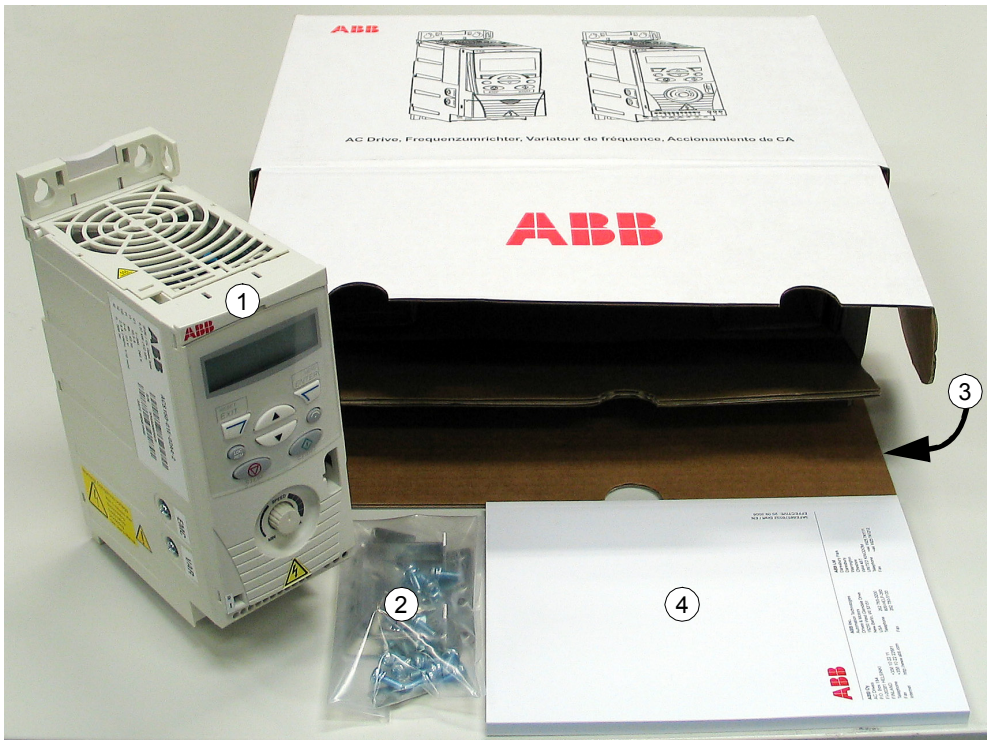

Delivery check

Check that there are no signs of damage. Notify the shipper immediately if damaged components are found.

Before attempting installation and operation, check the information on the type designation label of the drive to verify that the drive is of the correct type. The type designation label is attached to the left side of the drive. An example label and explanation of the label contents are shown below.

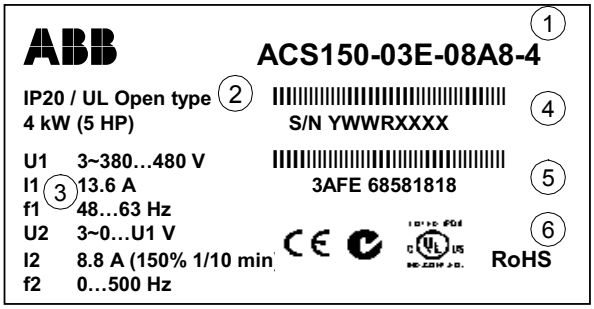

Type designation label

1	Type code, see section *Type code* on page *17*
2	Degree of protection (IP and UL/NEMA)
3	Nominal ratings, see section *Ratings* on page *113*.
4	Serial number of format YWWRXXXXWS, where Y: 5…9, A, … for 2005…2009, 2010, … WW: 01, 02, 03, … for week 1, week 2, week 3, … R: A, B, C, … for product revision number XXXX: Integer starting every week from 0001
5	ABB MRP code of the drive
6	CE marking and C-Tick and C-UL US marks (the label of your drive shows the valid markings)

Before installation

The ACS150 may be installed on the wall or in a cabinet. Check the enclosure requirements for the need to use the NEMA 1 option in wall installations (see chapter *Technical data*).

The drive can be mounted in three different ways:

a) back mounting

b) side mounting

c) DIN rail mounting.

The drive must be installed in an upright position. Check the installation site according to the requirements below. Refer to chapter *Dimensions* for frame details.

Requirements for the installation site

See chapter *Technical data* for the allowed operation conditions of the drive.

Wall

The wall should be as close to vertical and even as possible, of non-flammable material and strong enough to carry the weight of the drive.

Floor

The floor/material below the installation should be non-flammable.

Free space around the drive

The required free space for cooling above and below the drive is 75 mm (3 in.). No free space is required on the sides of the drive, so they can be mounted side by side.

Mounting the drive

Mount the drive

Note: Make sure that dust from drilling does not enter the drive during the installation.

With screws

1. Mark the locations for the holes using e.g. the mounting template cut out from the package. The locations of the holes are also shown in the drawings in chapter *Dimensions*. The number and location of the holes used depend on how the drive is mounted:
   a) back mounting: four holes
   b) side mounting: three holes; one of the bottom holes is located in the clamping plate.
2. Fix the screws or bolts to the marked locations.
3. Position the drive onto the screws on the wall.
4. Tighten the screws in the wall securely.

On DIN rail

1. Click the drive to the rail as shown in Figure a below. To detach the drive, press the release lever on top of the drive as shown in Figure b.

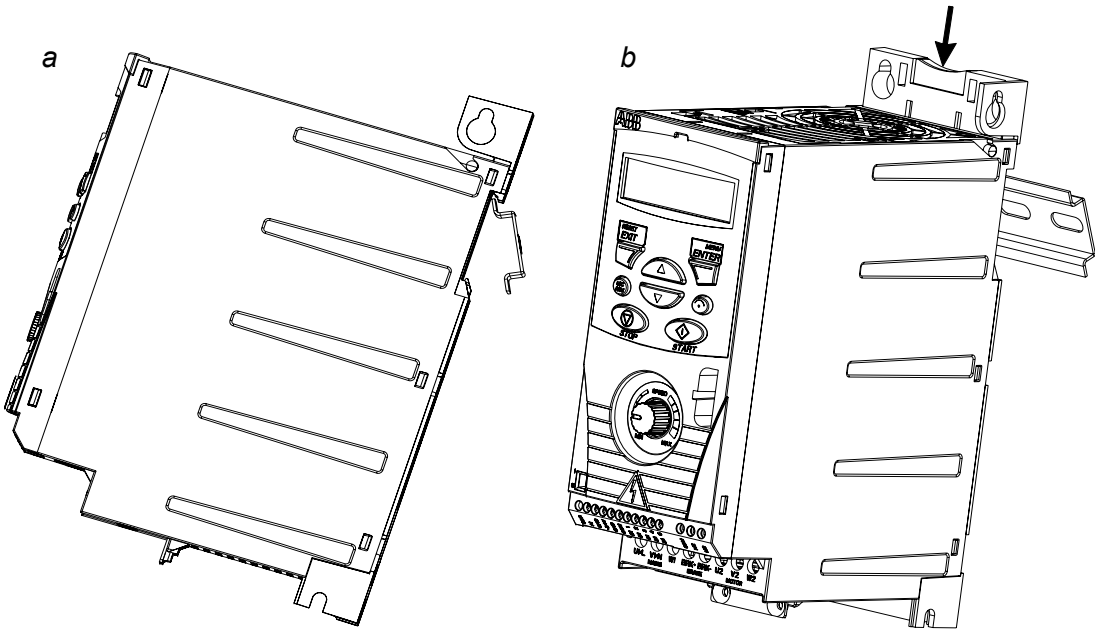

Fasten clamping plates

1. Fasten the clamping plate to the plate at the bottom of the drive with the provided screws.
2. Fasten the I/O clamping plate to the clamping plate with the provided screws.

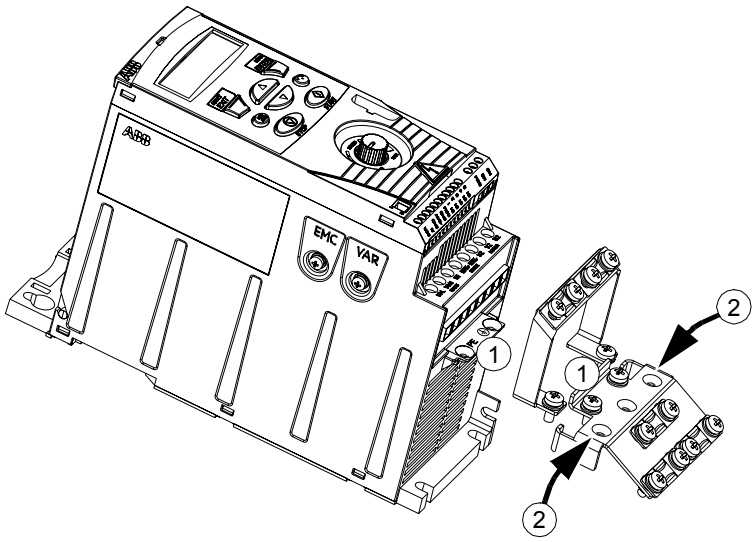

Planning electrical installation

What this chapter contains

The chapter contains the instructions that you must follow when selecting the motor, cables, protections, cable routing and way of operation for the drive. If the recommendations given by ABB are not followed, the drive may experience problems that the warranty does not cover.

Note: The installation must always be designed and made according to applicable local laws and regulations. ABB does not assume any liability whatsoever for any installation which breaches the local laws and/or other regulations.

Motor selection

Select the 3-phase AC induction motor according to the rating table on page *113* in chapter *Technical data*. The table lists the typical motor power for each drive type.

AC power line connection

Use a fixed connection to the AC power line.

WARNING! As the leakage current of the device typically exceeds 3.5 mA, a fixed installation is required according to IEC 61800-5-1.

Supply disconnecting device

Install a hand-operated input disconnecting device (disconnecting means) between the AC power source and the drive. The disconnecting device must be of a type that can be locked to the open position for installation and maintenance work.

- **Europe**: To meet the European Union Directives, according to standard EN 60204-1, Safety of Machinery, the disconnecting device must be one of the following types:
  - a switch-disconnector of utilization category AC-23B (EN 60947-3)
  - a disconnector having an auxiliary contact that in all cases causes switching devices to break the load circuit before the opening of the main contacts of the disconnector (EN 60947-3)
  - a circuit breaker suitable for isolation in accordance with EN 60947-2.
- **Other regions**: The disconnecting device must conform to the applicable safety regulations.

Thermal overload and short-circuit protection

The drive protects itself and the input and motor cables against thermal overload when the cables are dimensioned according to the nominal current of the drive. No additional thermal protection devices are needed.

WARNING! If the drive is connected to multiple motors, a separate thermal overload switch or a circuit breaker must be used for protecting each cable and motor. These devices may require a separate fuse to cut off the short-circuit current.

Protection against short-circuit inside the drive or in the supply cable

Arrange the protection according to the following guidelines.

Circuit diagram	Short-circuit protection
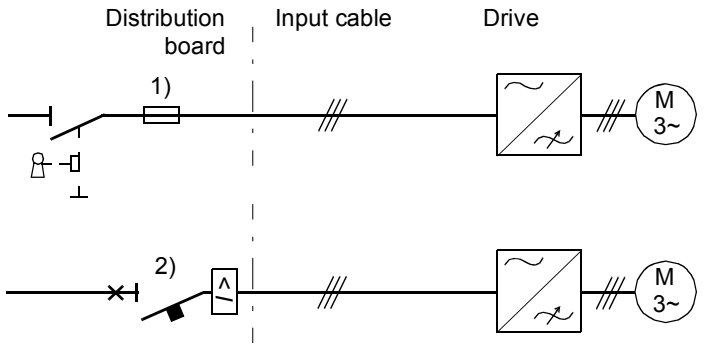	Protect the drive and input cable with fuses or a circuit breaker. See footnotes 1) and 2).

1) Size the fuses according to instructions given in chapter *Technical data*. The fuses will protect the input cable in short-circuit situations, restrict drive damage and prevent damage to adjoining equipment in case of a short-circuit inside the drive.

2) Circuit breakers which have been tested by ABB with the ACS150 can be used. Fuses must be used with other circuit breakers. Contact your local ABB representative for the approved breaker types and supply network characteristics.

   The protective characteristics of circuit breakers depend on the type, construction and settings of the breakers. There are also limitations pertaining to the short-circuit capacity of the supply network.

WARNING! Due to the inherent operating principle and construction of circuit breakers, independent of the manufacturer, hot ionized gases may escape from the breaker enclosure in case of a short-circuit. To ensure safe use, special attention must be paid to the installation and placement of the breakers. Follow the manufacturer's instructions.

Protection against short-circuit in the motor and motor cable

The drive protects the motor and motor cable in a short-circuit situation when the motor cable is dimensioned according to the nominal current of the drive. No additional protection devices are needed.

Thermal overload protection of the motor

According to regulations, the motor must be protected against thermal overload and the current must be switched off when overload is detected. The drive includes a motor thermal protection function that protects the motor and switches off the current when necessary. See parameter *3005* for more information on the motor thermal protection.

Selecting the power cables

General rules

Dimension the input power and motor cables **according to local regulations**.

- The cable must be able to carry the drive load current. See chapter *Technical data* for the rated currents.
- The cable must be rated for at least 70°C maximum permissible temperature of the conductor in continuous use. For US, see section *Additional US requirements* on page *27*.
- The conductivity of the PE conductor must be equal to that of the phase conductor (same cross-sectional area).
- 600 VAC cable is accepted for up to 500 VAC.
- Refer to chapter *Technical data* for the EMC requirements.

A symmetrical shielded motor cable (see the figure below) must be used to meet the EMC requirements of the CE and C-tick marks.

A four-conductor system is allowed for input cabling, but a shielded symmetrical cable is recommended.

Compared to a four-conductor system, the use of a symmetrical shielded cable reduces electromagnetic emission of the whole drive system as well as motor bearing currents and wear.

Alternative power cable types

Power cable types that can be used with the drive are presented below.

Motor cables
(recommended for input cables also)

Symmetrical shielded cable: three phase conductors, a concentric or otherwise symmetrically constructed PE conductor and a shield

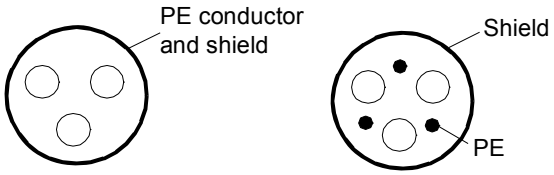

Note: A separate PE conductor is required if the conductivity of the cable shield is not sufficient for the purpose.

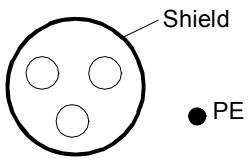

Allowed as input cables

A four-conductor system: three phase conductors and a protective conductor

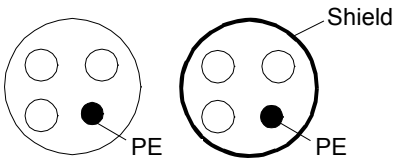

Motor cable shield

To function as a protective conductor, the shield must have the same cross-sectional area as the phase conductors when they are made of the same metal.

To effectively suppress radiated and conducted radio-frequency emissions, the shield conductivity must be at least 1/10 of the phase conductor conductivity. The requirements are easily met with a copper or aluminium shield. The minimum requirement of the motor cable shield of the drive is shown below. It consists of a concentric layer of copper wires with an open helix of copper tape. The better and tighter the shield, the lower the emission level and bearing currents.

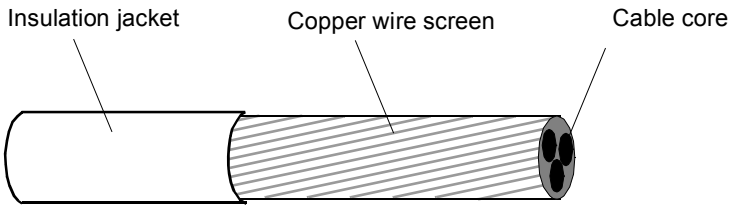

Additional US requirements

Type MC continuous corrugated aluminium armor cable with symmetrical grounds or shielded power cable is recommended for the motor cables if metallic conduit is not used.

The power cables must be rated for 75°C (167°F).

Conduit

Where conduits must be coupled together, bridge the joint with a ground conductor bonded to the conduit on each side of the joint. Bond the conduits also to the drive enclosure. Use separate conduits for input power, motor, brake resistors and control wiring. Do not run motor wiring from more than one drive in the same conduit.

Armored cable / shielded power cable

Six-conductor (three phases and three ground) type MC continuous corrugated aluminium armor cable with symmetrical grounds is available from the following suppliers (trade names in parentheses):

- Anixter Wire & Cable (Philsheath)
- BICC General Corp (Philsheath)
- Rockbestos Co. (Gardex)
- Oaknite (CLX).

Shielded power cables are available from Belden, LAPPKABEL (ÖLFLEX) and Pirelli.

Protecting the relay output contact and attenuating disturbances in case of inductive loads

Inductive loads (relays, contactors, motors) cause voltage transients when switched off.

Equip inductive loads with noise attenuating circuits [varistors, RC filters (AC) or diodes (DC)] in order to minimize the EMC emission at switch-off. If not suppressed, the disturbances may connect capacitively or inductively to other conductors in the control cable and form a risk of malfunction in other parts of the system.

Install the protective component as close to the inductive load as possible. Do not install protective components at the I/O terminal block.

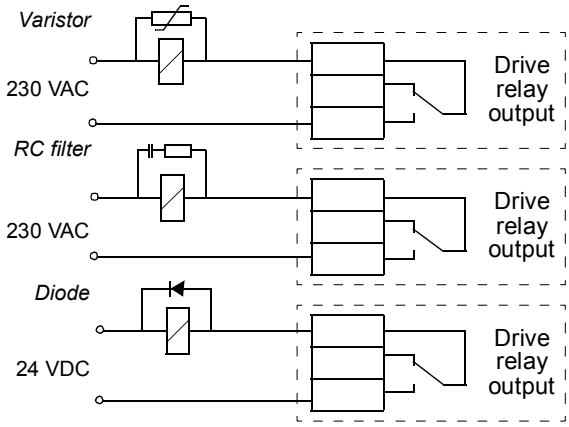

Residual current device (RCD) compatibility

ACS150-01x drives are suitable to be used with residual current devices of Type A, ACS150-03x drives with residual current devices of Type B. For ACS150-03x drives, other measures for protection in case of direct or indirect contact, such as separation from the environment by double or reinforced insulation or isolation from the supply system by a transformer, can also be applied.

Selecting the control cables

The analog control cable (if analog input AI is used) and the cable used for the frequency input must be shielded.

Use a double-shielded twisted pair cable (Figure a, e.g. JAMAK by Draka NK Cables) for the analog signal.

A double-shielded cable is the best alternative for low-voltage digital signals, but a single-shielded or unshielded twisted multipair cable (Figure b) is also usable. However, for frequency input, always use a shielded cable.

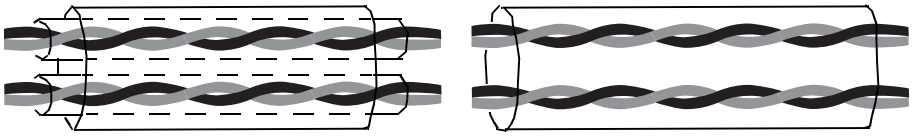

a
A double-shielded twisted multipair cable

b
A single-shielded twisted multipair cable

Run the analog signal and digital signals in separate cables.

Relay-controlled signals, providing their voltage does not exceed 48 V, can be run in the same cables as digital input signals. It is recommended that the relay-controlled signals are run as twisted pairs.

Never mix 24 VDC and 115/230 VAC signals in the same cable.

Relay cable

The cable type with braided metallic screen (e.g. ÖLFLEX by LAPPKABEL) has been tested and approved by ABB.

Routing the cables

Route the motor cable away from other cable routes. Motor cables of several drives can be run in parallel installed next to each other. It is recommended that the motor cable, input power cable and control cables be installed on separate trays. Avoid long parallel runs of motor cables with other cables to decrease electromagnetic interference caused by the rapid changes in the drive output voltage.

Where control cables must cross power cables make sure that they are arranged at an angle as near to 90 degrees as possible.

The cable trays must have good electrical bonding to each other and to the grounding electrodes. Aluminium tray systems can be used to improve local equalizing of potential.

A diagram of the cable routing is shown below.

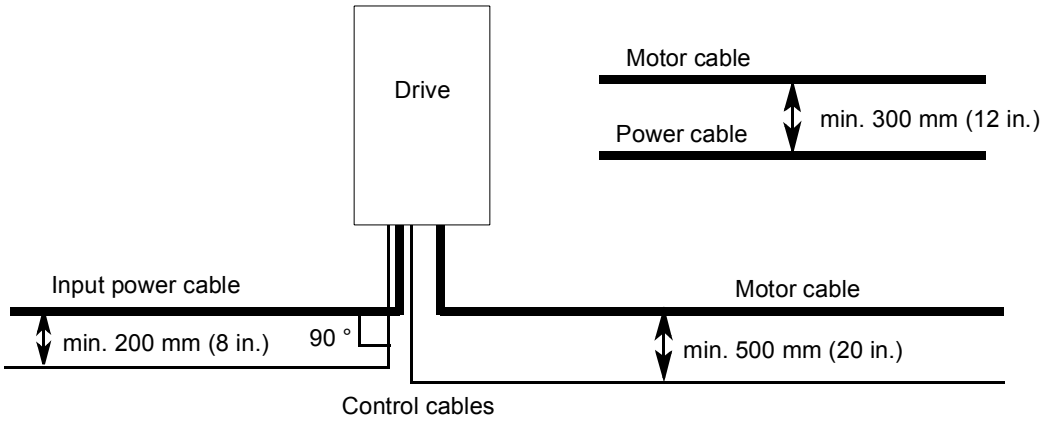

Control cable ducts

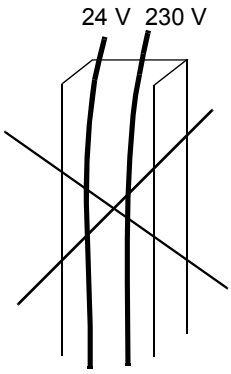

Not allowed unless the 24 V cable is insulated for 230 V or insulated with an insulation sleeving for 230 V.

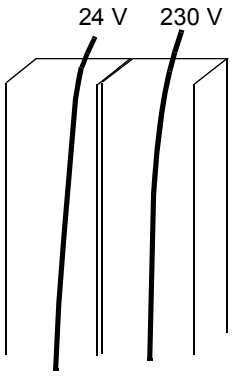

Lead 24 V and 230 V control cables in separate ducts inside the cabinet.

Electrical installation

What this chapter contains

The chapter describes the electrical installation procedure of the drive.

WARNING! The work described in this chapter may only be carried out by a qualified electrician. Follow the instructions in chapter *Safety* on page *5*. Ignoring the safety instructions can cause injury or death.

Make sure that the drive is disconnected from the input power during installation. If the drive is already connected to the input power, wait for 5 minutes after disconnecting the input power.

Checking the insulation of the assembly

Drive

Do not make any voltage tolerance or insulation resistance tests (e.g. hi-pot or megger) on any part of the drive as testing can damage the drive. Every drive has been tested for insulation between the main circuit and the chassis at the factory. Also, there are voltage-limiting circuits inside the drive which cut down the testing voltage automatically.

Input cable

Check the insulation of the input cable according to local regulations before connecting to the drive.

Motor and motor cable

Check the insulation of the motor and motor cable as follows:

1. Check that the motor cable is connected to the motor and disconnected from the drive output terminals U2, V2 and W2.
2. Measure the insulation resistance between each phase conductor and the Protective Earth conductor using a measuring voltage of 500 V DC. The insulation resistance of an ABB motor must exceed 10 Mohm (reference value at 25 °C or 77 °F). For the insulation resistance of other motors, please consult the manufacturer's instructions. **Note:** Moisture inside the motor casing will reduce the insulation resistance. If moisture is suspected, dry the motor and repeat the measurement.

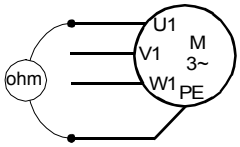

Connecting the power cables

Connection diagram

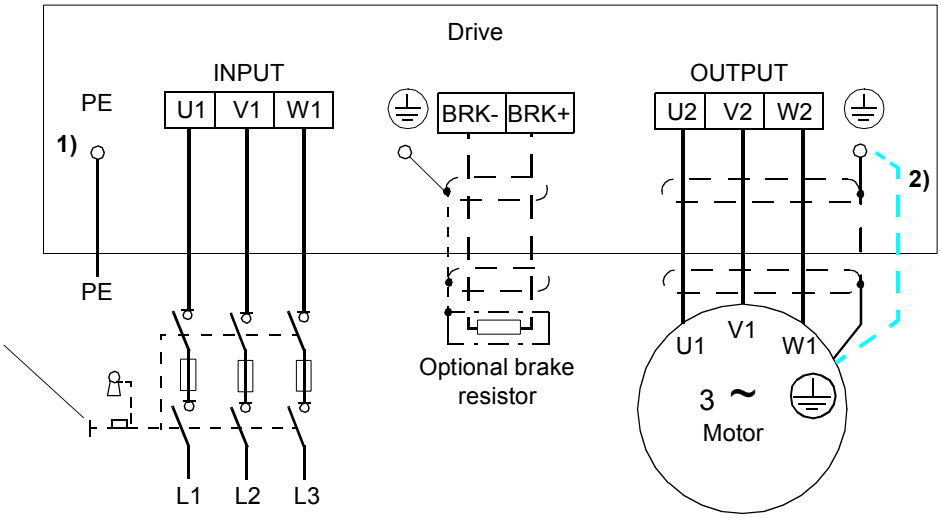

For alternatives, see section *Supply disconnecting device* on page *23*.

1) Ground the other end of the PE conductor at the distribution board.

2) Use a separate grounding cable if the conductivity of the cable shield is insufficient (smaller than the conductivity of the phase conductor) and there is no symmetrically constructed grounding conductor in the cable (see section *Selecting the power cables* on page *26*).

Note:

Do not use an asymmetrically constructed motor cable.

If there is a symmetrically constructed grounding conductor in the motor cable in addition to the conductive shield, connect the grounding conductor to the grounding terminal at the drive and motor ends.

Grounding of the motor cable shield at the motor end

For minimum radio frequency interference:

- ground the cable by twisting the shield as follows: flattened width ≥ 1/5 · length
- or ground the cable shield 360 degrees at the lead-through of the motor terminal box.

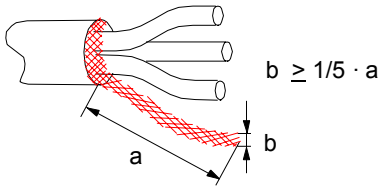

Procedure

1. On IT (ungrounded) systems and corner grounded TN systems, disconnect the internal EMC filter by removing the screw at EMC. For 3-phase U-type drives (with type code ACS150-03U-), the screw at EMC is already removed at the factory and replaced by a plastic screw.

WARNING! If a drive whose EMC filter is not disconnected is installed on an IT system [an ungrounded power system or a high resistance-grounded (over 30 ohms) power system], the system will be connected to earth potential through the EMC filter capacitors of the drive. This may cause danger or damage the drive.

If a drive whose EMC filter is not disconnected is installed on a corner grounded TN system, the drive will be damaged.

---

2. Fasten the grounding conductor (PE) of the input power cable under the grounding clamp. Connect the phase conductors to the U1, V1 and W1 terminals. Use a tightening torque of 0.8 N·m (7 lbf in.).
3. Strip the motor cable and twist the shield to form as short a pigtail as possible. Fasten the twisted shield under the grounding clamp. Connect the phase conductors to the U2, V2 and W2 terminals. Use a tightening torque of 0.8 N·m (7 lbf in.).
4. Connect the optional brake resistor to the BRK+ and BRK- terminals with a shielded cable using the same procedure as for the motor cable in step 3.
5. Secure the cables outside the drive mechanically.

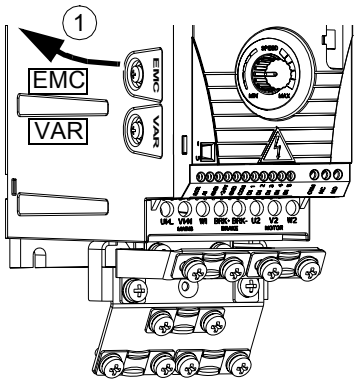

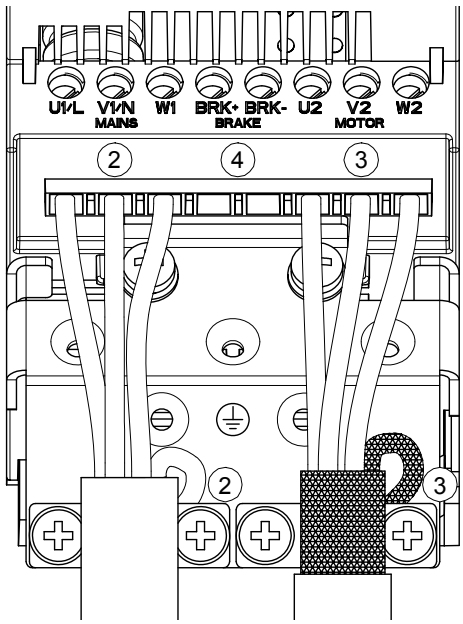

Tightening torque:
0.8 N·m (7 lbf in.)

Connecting the control cables

I/O terminals

The figure below shows the I/O connectors.

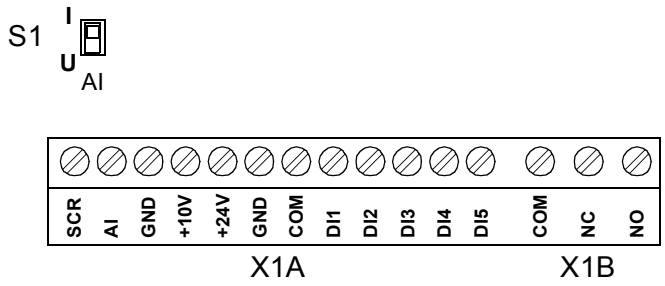

X1A: SCR
AI(1)
GND
+10 V
+24 V
ND
DCOM
DI1
DI2
DI3
DI4
DI5 digital or frequency input

X1B: (RO)COM
(RO)NC
(RO)NO

The default connection of the control signals depends on the application macro in use, which is selected with parameter *9902*. See chapter *Application macros* for the connection diagrams.

Switch S1 selects voltage (0 (2)…10 V) or current (0 (4)…20 mA) as the signal type for analog input AI. By default, switch S1 is in the current position.

Top position: I [0 (4)…20 mA], default for AI

Bottom position: U [0 (2)…10 V]

If DI5 is used as a frequency input, set group *18 FREQ INPUT* parameters accordingly.

WARNING! All ELV (extra low voltage) circuits connected to the drive must be used within a zone of equipotential bonding, i.e. within a zone where all simultaneously accessible conductive parts are electrically connected to prevent hazardous voltages appearing between them. This is accomplished by a proper factory grounding.

Procedure

1. *Analog signal (if connected)*: Strip the outer insulation of the analog signal cable 360 degrees and ground the bare shield under the clamp.
2. Connect the conductors to the appropriate terminals.
3. Connect the grounding conductor of the used pair in the analog signal cable to the SCR terminal.
4. *Digital signals*: Connect the conductors of the cable to the appropriate terminals.
5. Twist the grounding conductors and shields (if any) of the digital signal cables to a bundle and connect to the SCR terminal.
6. Secure all cables outside the drive mechanically.

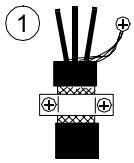

Tightening torque for:
- input signals = 0.22 N·m / 2 lbf. in.
- relay outputs = 0.5 N·m / 4.4 lbf. in.

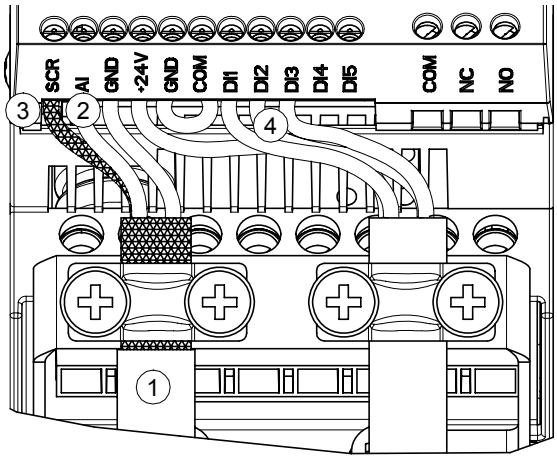

Installation checklist

Checklist

Check the mechanical and electrical installation of the drive before start-up. Go through the checklist below together with another person. Read chapter *Safety* on the first pages of this manual before you work on the drive.

	Check
MECHANICAL INSTALLATION	
☐	The ambient operating conditions are allowed. (See *Mechanical installation: Requirements for the installation site* on page *20, Technical data: Cooling air flow requirements* on page *115* and *Ambient conditions* on page *121*.)
☐	The drive is fixed properly on an even vertical non-flammable wall. (See *Mechanical installation.*)
☐	The cooling air will flow freely. (See *Mechanical installation*: *Free space around the drive* on page *21*.)
☐	The motor and the driven equipment are ready for start. (See *Planning electrical installation: Motor selection* on page *23* and *Technical data*: *Motor connection* on page *119*.)
ELECTRICAL INSTALLATION (See *Planning electrical installation* and *Electrical installation*.)	
☐	For ungrounded and corner grounded systems: The internal EMC filter is disconnected (screw EMC removed).
☐	The capacitors are reformed if the drive has been stored over two years.
☐	The drive is grounded properly.
☐	The input power voltage matches the drive nominal input voltage.
☐	The input power connections at U1, V1 and W1 are OK and tightened with the correct torque.
☐	Appropriate input power fuses and disconnector are installed.
☐	The motor connections at U2, V2 and W2 are OK and tightened with the correct torque.
☐	The motor cable is routed away from other cables.
☐	The external control (I/O) connections are OK.
☐	The input power voltage cannot be applied to the output of the drive (with a bypass connection).
☐	Terminal cover and, for NEMA 1, hood and connection box, are in place.

Start-up and control with I/O

What this chapter contains

The chapter instructs how to:

- do the start-up
- start, stop, change the direction of rotation and adjust the speed of the motor through the I/O interface.

Using the control panel to do these tasks is explained briefly in this chapter. For details on how to use the control panel, please refer to chapter *Control panel* starting on page *45*.

How to start up the drive

Before you start, ensure that you have the motor nameplate data on hand.

SAFETY		
	The start-up may only be carried out by a qualified electrician. The safety instructions given in chapter *Safety* must be followed during the start-up procedure. The drive will start up automatically if the external run command is on.	
☐	Check the installation. See the checklist in chapter *Installation checklist*.	
☐	Check that the starting of the motor does not cause any danger. **De-couple the driven machine** if there is a risk of damage in case of incorrect direction of rotation.	
POWER-UP		
☐	Apply input power. The panel goes to the Output mode.	LOC 0.0 Hz OUTPUT FWD
ENTRY OF START-UP DATA		
☐	Select the application macro (parameter *9902*). The default value 1 (ABB STANDARD) is suitable in most cases. The general parameter setting procedure in the Short Parameter mode is described below. You find more detailed instructions on setting parameters on page *53*. The general parameter setting procedure in the Short Parameter mode: 1. To go to the Main menu, press ▽ if the bottom line shows OUTPUT; otherwise press ▽ repeatedly until you see MENU at the bottom.	LOC 9902 S PAR FWD LOC rEF MENU FWD

2. Press keys ▲/▼ until you see “PAr S” in the display.

LOC PAr S MENU FWD

3. Press ⊓. The display shows a parameter of the Short Parameter mode.

LOC 9902 S PAR FWD

4. Find the appropriate parameter with keys ▲/▼.

LOC 9907 S PAR FWD

5. Press and hold ⊓ for about two seconds until the parameter value is shown with **SET** under the value.

LOC 50.0 Hz PAR SET FWD

6. Change the value with keys ▲/▼. The value changes faster while you keep the key pressed down.

LOC 60.0 Hz PAR SET FWD

7. Save the parameter value by pressing ⊓.

LOC 9907 S PAR FWD

☐ Enter the motor data from the motor nameplate:

Note: Set the motor data to exactly the same value as on the motor nameplate.

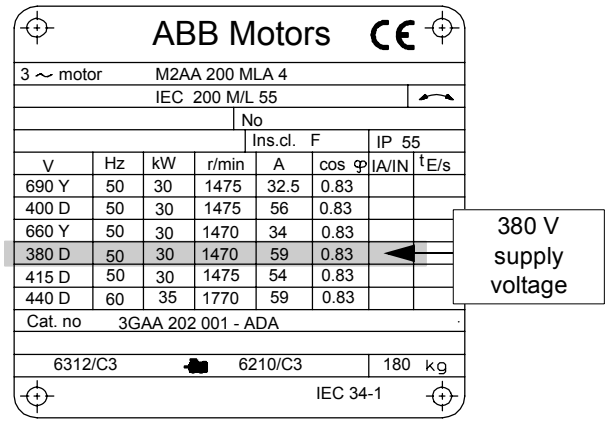

- motor nominal voltage (parameter *9905*) – follow steps given above, starting from step *4.*

LOC 9905 S PAR FWD

- motor nominal current (parameter *9906*)
  Allowed range: 0.2…2.0 · I_{2N} A

LOC 9906 S PAR FWD

- motor nominal frequency (parameter *9907*)

LOC 9907 S PAR FWD

☐ Set the maximum value for external reference REF1 (parameter *1105*).

LOC 1105 S PAR FWD

☐	Set constant speeds (drive output frequencies) 1, 2 and 3 (parameters *1202*, *1203* and *1204*).	LOC 1202 S PAR FWD LOC 1203 S PAR FWD LOC 1204 S PAR FWD
☐	Set the minimum value (%) corresponding to the minimum signal for AI(1) (parameter *1301*).	LOC 1301 S PAR FWD
☐	Set the maximum limit for the drive output frequency (parameter *2008*).	LOC 2008 S PAR FWD
☐	Select the motor stop function (parameter *2102*).	LOC 2102 S PAR FWD
	DIRECTION OF THE MOTOR ROTATION	
☐	Check the direction of the motor rotation. • Turn the potentiometer fully counterclockwise. • If the drive is in remote control (REM shown on the left), switch to local control by pressing LOC/REM. • Press ◇ to start the motor. • Turn the potentiometer slightly clockwise until the motor rotates. • Check that the actual direction of the motor is the same as indicated in the display (FWD means forward and REV reverse). • Press ▽ to stop the motor. To change the direction of the motor rotation: • Disconnect input power from the drive, and wait 5 minutes for the intermediate circuit capacitors to discharge. Measure the voltage between each input terminal (U1, V1 and W1) and earth with a multimeter to ensure that the drive is discharged. • Exchange the position of two motor cable phase conductors at the drive output terminals or at the motor connection box. • Verify your work by applying input power and repeating the check as described above.	LOC 2102 S PAR FWD 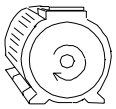 forward direction 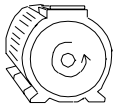 reverse direction

ACCELERATION/DECELERATION TIMES		
☐	Set the acceleration time 1 (parameter *2202*).	LOC 2202 s PAR FWD
☐	Set the deceleration time 1 (parameter *2203*).	LOC 2203 s PAR FWD
FINAL CHECK		
☐	The start-up is now completed. Check that there are no faults or alarms shown in the display.	
The drive is now ready for use.		

How to control the drive through the I/O interface

The table below instructs how to operate the drive through the digital and analog inputs when:

- the motor start-up is performed, and
- the default (standard) parameter settings are valid.

PRELIMINARY SETTINGS	
If you need to change the direction of rotation, check that parameter *1003* is set to 3 (REQUEST).	
Ensure that the control connections are wired according to the connection diagram given for the ABB Standard macro.	See *ABB Standard macro* on page *59*.
Ensure that the drive is in remote control. Press key (LOC/REM) to switch between remote and local control.	In remote control, the panel display shows text REM.
STARTING AND CONTROLLING THE SPEED OF THE MOTOR	
Start by switching digital input DI1 on. Text FWD starts flashing fast and stops after the setpoint is reached.	REM 0.0 Hz OUTPUT FWD
Regulate the drive output frequency (motor speed) by adjusting the voltage or current of the analog input AI(1).	REM 50.0 Hz OUTPUT FWD
CHANGING THE DIRECTION OF ROTATION OF THE MOTOR	
Reverse direction: Switch digital input DI2 on.	REM 50.0 Hz OUTPUT REV
Forward direction: Switch digital input DI2 off.	REM 50.0 Hz OUTPUT FWD
STOPPING THE MOTOR	
Switch digital input DI1 off. The motor stops and text FWD starts flashing slowly.	REM 0.0 Hz OUTPUT FWD

Control panel

What this chapter contains

The chapter describes the control panel keys and display fields. It also instructs in using the panel in control, monitoring and changing the settings.

Integrated Control Panel

The ACS150 works with the Integrated Control Panel, which provides basic tools for manual entry of parameter values.

Overview

The following table summarizes the key functions and displays on the Integrated Control Panel.

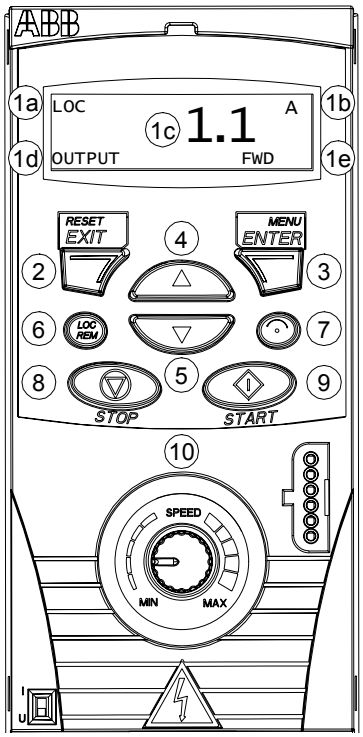

No.	Use
1	LCD display – Divided into five areas: a. Upper left – Control location: LOC: drive control is local, that is, from the control panel REM: drive control is remote, such as the drive I/O. b. Upper right – Unit of the displayed value. s: Short Parameter mode, browsing the list of parameters. c. Center – Variable; in general, shows parameter and signal values, menus or lists. Also displays alarm and fault codes. d. Lower left and center – Panel operation state: OUTPUT: Output mode PAR: Steady: Parameter modes Flashing: Changed Parameters mode MENU: Main menu. FAULT: Fault mode. e. Lower right – Indicators: FWD (forward) / REV (reverse): direction of the motor rotation Flashing slowly: stopped Flashing quickly: running, not at setpoint Steady: running, at setpoint SET: Displayed value can be modified (in the Parameter or Reference mode).
2	RESET/EXIT – Exits to the next higher menu level without saving changed values. Resets faults in the Output and Fault modes.
3	MENU/ENTER – Enters deeper into menu level. In the Parameter mode, saves the displayed value as the new setting.
4	Up – • Scrolls up through a menu or list. • Increases a value if a parameter is selected. Holding the key down changes the value faster.
5	Down – • Scrolls down through a menu or list. • Decreases a value if a parameter is selected. Holding the key down changes the value faster.
6	LOC/REM – Changes between local and remote control of the drive.
7	DIR – Changes the direction of the motor rotation.
8	STOP – Stops the drive in local control.
9	START – Starts the drive in local control.
10	Potentiometer – Changes the frequency reference.

Operation

You operate the control panel with the help of menus and keys. You select an option (e.g. operation mode or parameter) by scrolling the ▲ and ▼ arrow keys until the option is visible in the display and then pressing the key.

With the key, you return to the previous operation level without saving the made changes.

The ACS150 includes an integrated potentiometer located at the front of the drive. It is used for setting the frequency reference.

The Integrated Control Panel has six panel modes: Output, Reference, Short Parameter, Long Parameter, Changed Parameters and Fault. The operation in the first five modes is described in this chapter. When a fault or alarm occurs, the panel goes automatically to the Fault mode showing the fault or alarm code. You can reset the fault or alarm in the Output or Fault mode (see chapter *Fault tracing*).

When the power is switched on, the panel is in the Output mode, where you can start, stop, change the direction, switch between local and remote control, monitor up to three actual values (one at a time) and set the frequency reference. To do other tasks, go first to the Main menu and select the appropriate mode. The figure below shows how to move between modes.

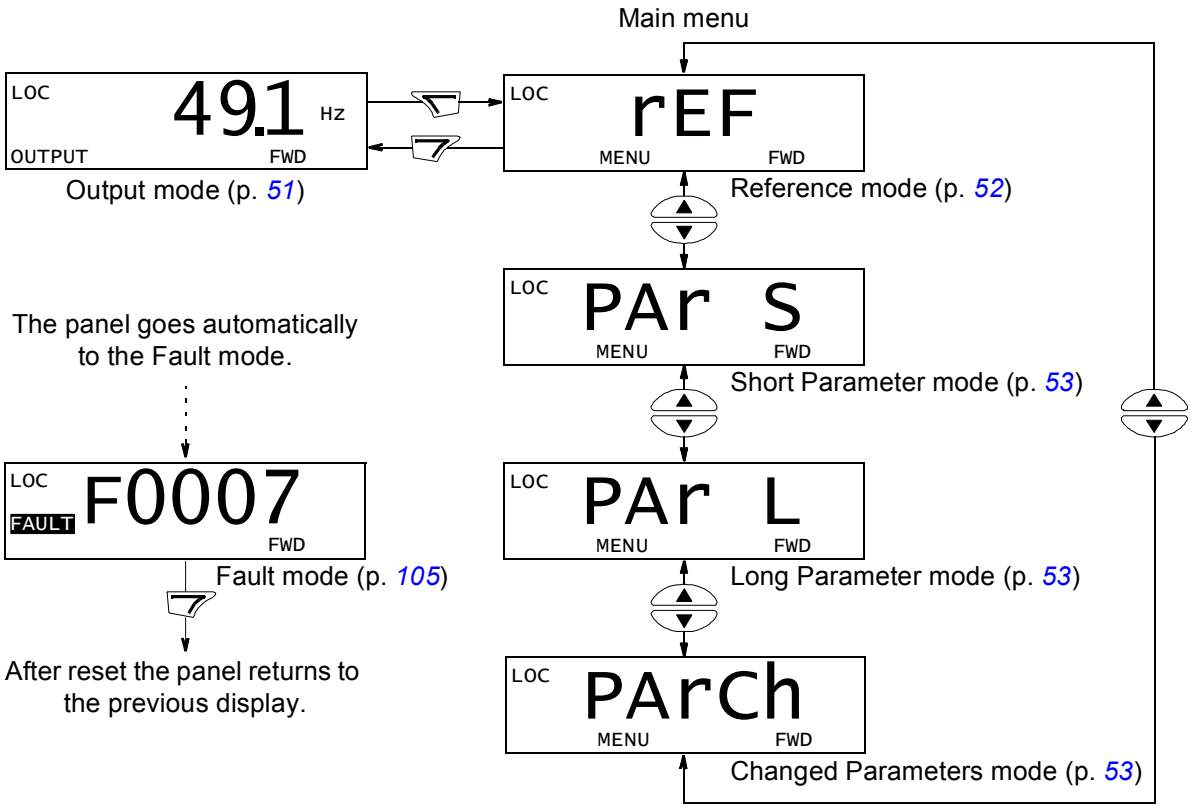

How to do common tasks

The table below lists common tasks, the mode in which you can perform them and the page number where the steps to do the task are described in detail.

Task	Mode	Page
How to switch between local and remote control	Any	49
How to start and stop the drive	Any	49
How to change the direction of the motor rotation	Any	49
How to set the frequency reference	Any	50
How to view and set the frequency reference	Reference	52
How to browse the monitored signals	Output	51
How to change the value of a parameter	Short/Long Parameter	53
How to select the monitored signals	Short/Long Parameter	54
How to view and edit changed parameters	Changed Parameters	55
How to reset faults and alarms	Output, Fault	105

How to start, stop and switch between local and remote control

You can start, stop and switch between local and remote control in any mode. To be able to start or stop the drive, the drive must be in local control.

Step	Action	Display
1.	• To switch between remote control (REM shown on the left) and local control (LOC shown on the left), press (LOC/REM). **Note:** Switching to local control can be disabled with parameter *1606* LOCAL LOCK. After pressing the key, the display briefly shows message “LoC” or “rE”, as appropriate, before returning to the previous display. The very first time the drive is powered up, it is in remote control (REM) and controlled through the drive I/O terminals. To switch to local control (LOC) and control the drive using the control panel and the integrated potentiometer, press (LOC/REM). The result depends on how long you press the key: • If you release the key immediately (the display flashes “LoC”), the drive stops. Set the local control reference with the potentiometer. • If you press the key for about two seconds (release when the display changes from “LoC” to “LoC r”), the drive continues as before, except that the current position of the potentiometer determines the local reference (if there is a great difference between the remote and local references, the transfer from remote to local control is not smooth). The drive copies the current remote value for run/stop status and uses it as the initial local run/stop setting. • To stop the drive in local control, press (⊽) to stop. • To start the drive in local control, press (◇) to start.	LOC 49.1 Hz OUTPUT FWD LOC LoC FWD Text FWD or REV on the bottom line starts flashing slowly. Text FWD or REV on the bottom line starts flashing quickly. When the drive reaches the setpoint, it stops flashing.

How to change the direction of the motor rotation

You can change the direction of the motor rotation in any mode.

Step	Action	Display
1.	If the drive is in remote control (REM shown on the left), switch to local control by pressing (LOC/REM). The display briefly shows message “LoC” or “rE”, as appropriate, before returning to the previous display.	LOC 49.1 Hz OUTPUT FWD
2.	To change the direction from forward (FWD shown at the bottom) to reverse (REV shown at the bottom), or vice versa, press (⟲). **Note**: Parameter *1003* must be set to 3 (REQUEST).	LOC 49.1 Hz OUTPUT REV

How to set the frequency reference

You can set the local frequency reference with the integrated potentiometer in any mode when the drive is in local control if parameter *1109* LOC REF SOURCE has the default value 0 (POT).

If parameter *1109* LOC REF SOURCE has been changed to 1 (KEYPAD), so that you can use keys ▲ and ▼ for setting the local reference, you have to do it in the Reference mode (see page *52*).

To view the current local reference, you have to go to the Reference mode.

Step	Action	Display
1.	If the drive is in remote control (REM shown on the left), switch to local control by pressing (LOC/REM). The display briefly shows “LoC” before switching to local control. **Note**: With group *11 REFERENCE SELECT*, you can allow changing of the remote (external) reference in remote control (REM) e.g. using the integrated potentiometer or keys ▲ and ▼.	LOC PAr S MENU FWD
2.	• To increase the reference value, rotate the integrated potentiometer clockwise. • To decrease the reference value, rotate the integrated potentiometer counterclockwise.	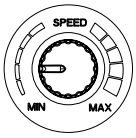

Output mode

In the Output mode, you can:

- monitor actual values of up to three group *01 OPERATING DATA* signals, one signal at a time
- start, stop, change direction, switch between local and remote control and set the frequency reference.

You get to the Output mode by pressing the key until the display shows text OUTPUT at the bottom.

The display shows the value of one group *01 OPERATING DATA* signal. The unit is shown on the right. Page *54* tells how to select up to three signals to be monitored in the Output mode. The table below shows how to view them one at a time.

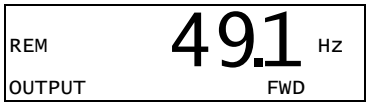

How to browse the monitored signals

Step	Action	Display
1.	If more than one signals have been selected to be monitored (see page *54*), you can browse them in the Output mode. To browse the signals forward, press key ▲ repeatedly. To browse them backward, press key ▼ repeatedly.	REM 49.1 Hz OUTPUT FWD REM 0.5 A OUTPUT FWD REM 10.7 % OUTPUT FWD

Reference mode

In the Reference mode, you can:

- view and set the frequency reference
- start, stop, change direction and switch between local and remote control.

How to view and set the frequency reference

You can set the local frequency reference with the integrated potentiometer in any mode when the drive is in local control if parameter *1109* LOC REF SOURCE has the default value 0 (POT). If parameter *1109* LOC REF SOURCE has been changed to 1 (KEYPAD), you have to set the local frequency reference in the Reference mode.

You can view the current local reference in the Reference mode only.

Step	Action	Display
1.	Go to the Main menu by pressing if you are in the Output mode, otherwise by pressing repeatedly until you see MENU at the bottom.	REM PAr S MENU FWD
2.	If the drive is in remote control (REM shown on the left), switch to local control by pressing LOC/REM. The display briefly shows “LoC” before switching to local control. **Note**: With group *11 REFERENCE SELECT*, you can allow changing of the remote (external) reference in remote control (REM) e.g. using the integrated potentiometer or keys ▲ and ▼.	LOC PAr S MENU FWD
3.	If the panel is not in the Reference mode (“rEF” not visible), press key ▲ or ▼ until you see “rEF” and then press . Now the display shows the current reference value with SET under the value.	LOC rEF MENU FWD LOC 49.1 Hz SET FWD
4.	If parameter *1109* LOC REF SOURCE = 0 (POT, default): • To increase the reference value, rotate the integrated potentiometer clockwise. • To decrease the reference value, rotate the integrated potentiometer counterclockwise. The new value (potentiometer setting) is shown in the display. If parameter *1109* LOC REF SOURCE = 1 (KEYPAD): • To increase the reference value, press ▲. • To decrease the reference value, press ▼. The new value is shown in the display.	SPEED MIN MAX LOC 50.0 Hz SET FWD LOC 50.0 Hz SET FWD

Parameter modes

There are two parameter modes: Short Parameter mode and Long Parameter mode. Both function identically, except that the Short Parameter mode shows only the minimum number of parameters typically required to set up the drive (see section *Parameters in the Short Parameter mode* on page *66*). The Long Parameter mode shows all user parameters including those shown in the Short Parameter mode.

In the Parameter modes, you can:

- view and change parameter values
- start, stop, change direction, switch between local and remote control and set the frequency reference.

How to select a parameter and change its value

Step	Action	Display
1.	Go to the Main menu by pressing if you are in the Output mode, otherwise by pressing repeatedly until you see MENU at the bottom.	LOC rEF MENU FWD
2.	If the panel is not in the desired Parameter mode (“PAr S”/“PAr L” not visible), press key ▲ or ▼ until you see “PAr S” (Short Parameter mode) or “PAr L” (Long Parameter mode), as appropriate.	LOC PAr S MENU FWD LOC PAr L MENU FWD
3.	Short Parameter mode (PAr S): • Press . The display shows one of the parameters of the Short Parameter mode. Letter s in the top right corner indicates that you are browsing parameters in the Short Parameter mode. Long Parameter mode (PAr L): • Press . The display shows the number of one of the parameter groups in the Long Parameter mode. • Use keys ▲ and ▼ to find the desired parameter group. • Press . The display shows one of the parameters in the selected group.	LOC 1202 s PAR FWD LOC -01- PAR FWD LOC -12- PAR FWD LOC 1202 PAR FWD
4.	Use keys ▲ and ▼ to find the desired parameter.	LOC 1203 PAR FWD
5.	Press and hold for about two seconds until the display shows the value of the parameter with SET underneath indicating that changing of the value is now possible. **Note:** When SET is visible, pressing keys ▲ and ▼ simultaneously changes the displayed value to the default value of the parameter.	LOC 10.0 Hz PAR SET FWD

Step	Action	Display
6.	Use keys ▲ and ▼ to select the parameter value. When you have changed the parameter value, SET starts flashing. • To save the displayed parameter value, press ⊓. • To cancel the new value and keep the original, press ⊓.	LOC 12.0 Hz PAR SET FWD LOC 1203 PAR FWD

How to select the monitored signals

Step	Action	Display
1.	You can select which signals are monitored in the Output mode and how they are displayed with group *34 PANEL DISPLAY* parameters. See page *53* for detailed instructions on changing parameter values. By default, you can monitor the following three signals by browsing: *0103* OUTPUT FREQ, *0104* CURRENT and *0105* TORQUE. To change the default signals, select from group *01 OPERATING DATA* up to three signals to be browsed. Signal 1: Change the value of parameter *3401* SIGNAL1 PARAM to the index of the signal parameter in group *01 OPERATING DATA* (= number of the parameter without the leading zero), e.g. 105 means parameter *0105* TORQUE. Value 0 means that no signal is displayed. Repeat for signals 2 (*3408* SIGNAL2 PARAM) and 3 (*3415* SIGNAL3 PARAM). For example, if *3401* = 0 and *3415* = 0, browsing is disabled and only the signal specified by *3408* appears in the display. If all three parameters are set to 0, i.e. no signals are selected for monitoring, the panel displays text “n.A.”.	LOC 103 PAR SET FWD LOC 104 PAR SET FWD LOC 105 PAR SET FWD
2.	Select how you want the signals to be displayed. For details, see parameter *3404*. Signal 1: parameter *3404* OUTPUT1 DSP FORM Signal 2: parameter *3411* OUTPUT2 DSP FORM Signal 3: parameter *3418* OUTPUT3 DSP FORM.	LOC 9 PAR SET FWD
3.	Select the units to be displayed for the signals. This has no effect if parameter *3404*/*3411*/*3418* is set to 9 (DIRECT). For details, see parameter *3405*. Signal 1: parameter *3405* OUTPUT1 UNIT Signal 2: parameter *3412* OUTPUT2 UNIT Signal 3: parameter *3419* OUTPUT3 UNIT.	LOC 3 PAR SET FWD
4.	Select the scalings for the signals by specifying the minimum and maximum display values. This has no effect if parameter *3404*/*3411*/*3418* is set to 9 (DIRECT). For details, see parameters *3406* and *3407*. Signal 1: parameters *3406* OUTPUT1 MIN and *3407* OUTPUT1 MAX Signal 2: parameters *3413* OUTPUT2 MIN and *3414* OUTPUT2 MAX Signal 3: parameters *3420* OUTPUT3 MIN and *3421* OUTPUT3 MAX.	LOC 0.0 Hz PAR SET FWD LOC 500.0 Hz PAR SET FWD

Changed Parameters mode

In the Changed Parameters mode, you can:

- view a list of all parameters that have been changed from the macro default values
- change these parameters
- start, stop, change direction, switch between local and remote control and set the frequency reference.

How to view and edit changed parameters

Step	Action	Display
1.	Go to the Main menu by pressing if you are in the Output mode, otherwise by pressing repeatedly until you see MENU at the bottom.	LOC rEF MENU FWD
2.	If the panel is not in the Changed Parameters mode (“PArCh” not visible), press key or until you see “PArCh” and then press . The display shows the number of the first changed parameter and PAR is flashing.	LOC PArCh MENU FWD LOC 1103 PAR FWD
3.	Use keys and to find the desired changed parameter on the list.	LOC 1003 PAR FWD
4.	Press and hold for about two seconds until the display shows the value of the parameter with SET underneath indicating that changing of the value is now possible. **Note:** When SET is visible, pressing keys and simultaneously changes the displayed value to the default value of the parameter.	LOC 1 PAR SET FWD
5.	Use keys and to select the parameter value. When you have changed the parameter value, SET starts flashing. • To save the displayed parameter value, press . • To cancel the new value and keep the original, press .	LOC 2 PAR SET FWD LOC 1003 PAR FWD

Application macros

What this chapter contains

The chapter describes the application macros. For each macro, there is a wiring diagram showing the default control connections (digital and analog I/O).

Overview of macros

Application macros are preprogrammed parameter sets. While starting up the drive, the user selects the macro best suited for the purpose with parameter *9902* APPLIC MACRO.

The ACS150 has five application macros. The table below contains a summary of the macros and describes suitable applications.

Macro	Suitable applications
ABB Standard	Ordinary speed control applications where no, one, two or three constant speeds are used. Start/stop is controlled with one digital input (level start and stop). It is possible to switch between two acceleration and deceleration times.
3-wire	Ordinary speed control applications where no, one, two or three constant speeds are used. The drive is started and stopped with push buttons.
Alternate	Speed control applications where no, one, two or three constant speeds are used. Start, stop and direction are controlled by two digital inputs (combination of the input states determines the operation).
Motor Potentiometer	Speed control applications where no or one constant speed is used. The speed is controlled by two digital inputs (increase / decrease / keep unchanged).
Hand/Auto	Speed control applications where switching between two control devices is needed. Some control signal terminals are reserved to one device, the rest for the other. One digital input selects between the terminals (devices) in use.

Summary of I/O connections of application macros

The following table gives the summary of the default I/O connections of all application macros.

Input/output	Macro				
	ABB Standard	**3-wire**	**Alternate**	**Motor Potentiometer**	**Hand/Auto**
AI	Frequency reference	Frequency reference	Frequency reference	-	Frequency ref. (Auto) [1]
DI1	Stop/Start	Start (pulse)	Start (forward)	Stop/Start	Stop/Start (Hand)
DI2	Forward/ Reverse	Stop (pulse)	Start (reverse)	Forward/ Reverse	Forward/ Reverse (Hand)
DI3	Constant speed input 1	Forward/ Reverse	Constant speed input 1	Frequency reference up	Hand/Auto
DI4	Constant speed input 2	Constant speed input 1	Constant speed input 2	Frequency reference down	Forward/ Reverse (Auto)
DI5	Ramp pair selection	Constant speed input 2	Ramp pair selection	Constant speed 1	Stop/Start (Auto)
RO (COM, NC, NO)	Fault (-1)	Fault (-1)	Fault (-1)	Fault (-1)	Fault (-1)

[1] The frequency reference comes from the integrated potentiometer when Hand is selected.

ABB Standard macro

This is the default macro. It provides a general purpose I/O configuration with three constant speeds. Parameter values are the default values given in chapter *Actual signals and parameters*, starting from page *65*.

If you use other than the default connections presented below, see section *I/O terminals* on page *34*.

Default I/O connections

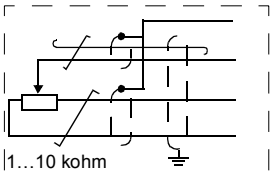

Alternative connection for AI1. If used, switch IU selector to U (0…10 V voltage signal).

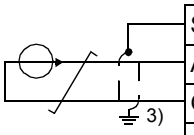

I/O connection [4]

SCR	Signal cable shield (screen)
AI	**Frequency reference**: 0…20 mA
GND	Analog input circuit common
+10V	Reference voltage: +10 VDC, max. 10 mA
+24V	Auxiliary voltage output: +24 VDC, max. 200 mA
GND	Auxiliary voltage output common
DCOM	Digital input common
DI1	**Stop (0) / Start (1)**
DI2	**Forward (0) / Reverse (1)**
DI3	**Constant speed selection** [1]
DI4	**Constant speed selection** [1]
DI5	**Acceleration and deceleration selection** [2]

Relay connection [5]

COM	Relay output
NC	**No fault [Fault (-1)]**
NO	

[1] See parameter group *12 CONSTANT SPEEDS*:

DI3	DI4	Operation (parameter)
0	0	Set speed through integrated potentiometer
1	0	Speed 1 (*1202*)
0	1	Speed 2 (*1203*)
1	1	Speed 3 (*1204*)

[2] 0 = ramp times according to parameters *2202* and *2203*.
1 = ramp times according to parameters *2205* and *2206*.

[3] 360 degree grounding under a clamp.

[4] Tightening torque = 0.22 N·m / 2 lbf. in.

[5] Tightening torque = 0.5 N·m / 4.4 lbf. in.

3-wire macro

This macro is used when the drive is controlled using momentary push-buttons. It provides three constant speeds. To enable the macro, set the value of parameter *9902* to 2 (3-WIRE).

For the parameter default values, see section *Default parameter values with different macros* on page *65*. If you use other than the default connections presented below, see section *I/O terminals* on page *34*.

Note: When the stop input (DI2) is deactivated (no input), the control panel start and stop buttons are disabled.

Default I/O connections

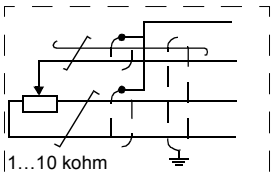

Alternative connection for AI1. If used, switch IU selector to U (0…10 V voltage signal).

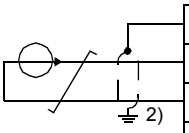

I/O connection [3]

SCR	Signal cable shield (screen)
AI	**Frequency reference**: 0…20 mA
GND	Analog input circuit common
+10V	Reference voltage: +10 VDC, max. 10 mA
+24V	Auxiliary voltage output: +24 VDC, max. 200 mA
GND	Auxiliary voltage output common
DCOM	Digital input common
DI1	**Start (pulse ⎍)**
DI2	**Stop (pulse ⎌)**
DI3	**Forward (0) / Reverse (1)**
DI4	**Constant speed selection** [1]
DI5	**Constant speed selection** [1]

Relay connection [4]

COM	Relay output
NC	**No fault [Fault (-1)]**
NO	

[1] See parameter group *12 CONSTANT SPEEDS*:

DI3	DI4	Operation (parameter)
0	0	Set speed through integrated potentiometer
1	0	Speed 1 (*1202*)
0	1	Speed 2 (*1203*)
1	1	Speed 3 (*1204*)

[2] 360 degree grounding under a clamp.

[3] Tightening torque = 0.22 N·m / 2 lbf. in.

[4] Tightening torque = 0.5 N·m / 4.4 lbf. in.

Alternate macro

This macro provides an I/O configuration adapted to a sequence of DI control signals used when alternating the rotation direction of the drive. To enable the macro, set the value of parameter *9902* to 3 (ALTERNATE).

For the parameter default values, see section *Default parameter values with different macros* on page *65*. If you use other than the default connections presented below, see section *I/O terminals* on page *34*.

Default I/O connections

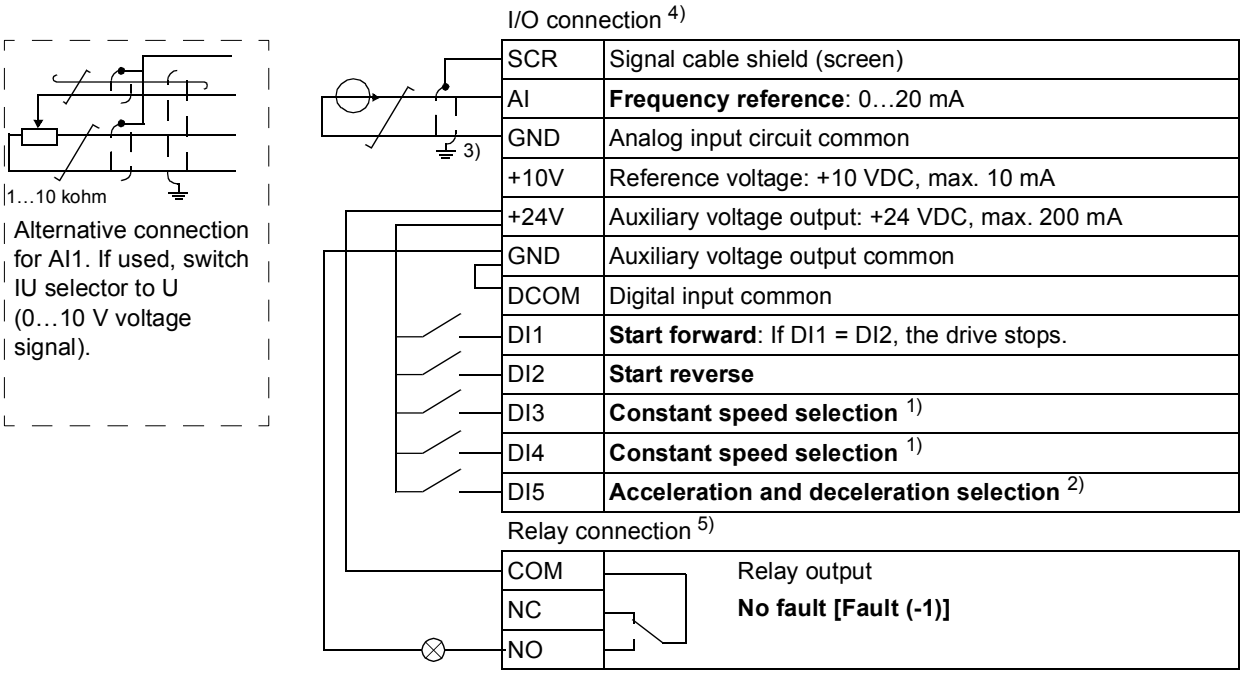

1) See parameter group *12 CONSTANT SPEEDS*:

DI3	DI4	Operation (parameter)
0	0	Set speed through integrated potentiometer
1	0	Speed 1 (*1202*)
0	1	Speed 2 (*1203*)
1	1	Speed 3 (*1204*)

2) 0 = ramp times according to parameters *2202* and *2203*.
1 = ramp times according to parameters *2205* and *2206*.

3) 360 degree grounding under a clamp.

4) Tightening torque = 0.22 N·m / 2 lbf. in.

5) Tightening torque = 0.5 N·m / 4.4 lbf. in.

Motor Potentiometer macro

This macro provides a cost-effective interface for PLCs that vary the speed of the drive using only digital signals. To enable the macro, set the value of parameter *9902* to 4 (MOTOR POT).

For the parameter default values, see section *Default parameter values with different macros* on page *65*. If you use other than the default connections presented below, see section *I/O terminals* on page *34*.

Default I/O connections

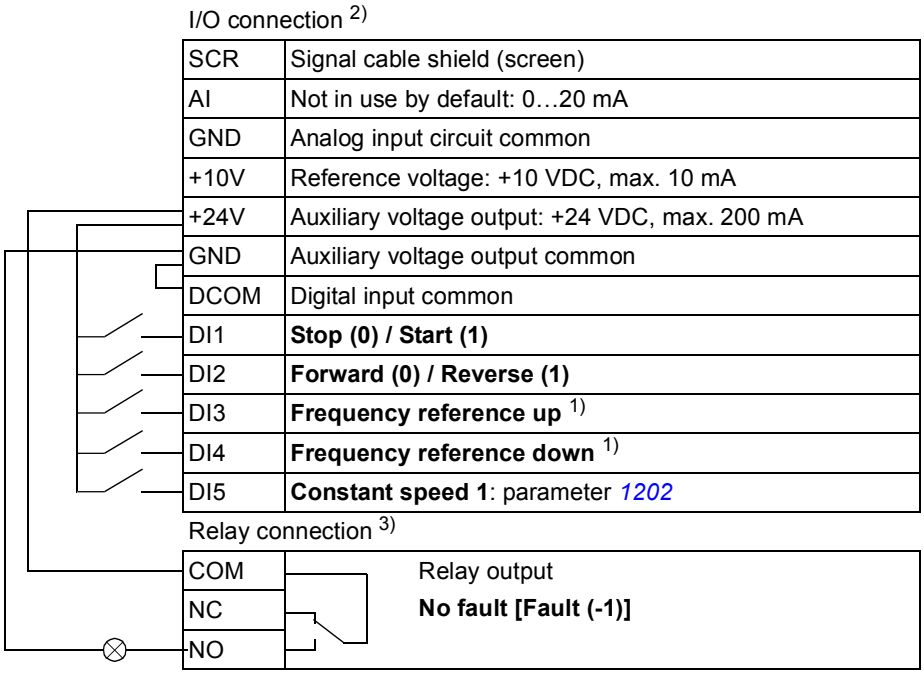

I/O connection [2]

SCR	Signal cable shield (screen)
AI	Not in use by default: 0…20 mA
GND	Analog input circuit common
+10V	Reference voltage: +10 VDC, max. 10 mA
+24V	Auxiliary voltage output: +24 VDC, max. 200 mA
GND	Auxiliary voltage output common
DCOM	Digital input common
DI1	**Stop (0) / Start (1)**
DI2	**Forward (0) / Reverse (1)**
DI3	**Frequency reference up** [1]
DI4	**Frequency reference down** [1]
DI5	**Constant speed 1**: parameter *1202*

Relay connection [3]

COM	Relay output
NC	**No fault [Fault (-1)]**
NO	

[1] If DI3 and DI4 are both active or inactive, the frequency reference is unchanged.

The existing frequency reference is stored during stop and power down.

[2] Tightening torque = 0.22 N·m / 2 lbf. in

[3] Tightening torque = 0.5 N·m / 4.4 lbf. in.

Hand/Auto macro

This macro can be used when switching between two external control devices is needed. To enable the macro, set the value of parameter *9902* to 5 (HAND/AUTO).

For the parameter default values, see section *Default parameter values with different macros* on page *65*. If you use other than the default connections presented below, see section *I/O terminals* on page *34*.

Note: Parameter *2108* START INHIBIT must remain in the default setting 0 (OFF).

Default I/O connections

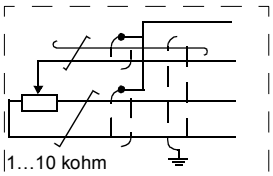

Alternative connection for AI1. If used, switch IU selector to U (2…10 V voltage signal).

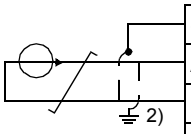

I/O connection [3]

SCR	Signal cable shield (screen)
AI	**Frequency reference (Auto)**: 4…20 mA [1]
GND	Analog input circuit common
+10V	Reference voltage: +10 VDC, max. 10 mA
+24V	Auxiliary voltage output: +24 VDC, max. 200 mA
GND	Auxiliary voltage output common
DCOM	Digital input common
DI1	**Stop (0) / Start (1) (Hand)**
DI2	**Forward (0) / Reverse (1) (Hand)**
DI3	**Hand (0) / Auto (1) control selection**
DI4	**Forward (0) / Reverse (1) (Auto)**
DI5	**Stop (0) / Start (1) (Auto)**

Relay connection [4]

COM	Relay output
NC	**No fault [Fault (-1)]**
NO	

[1] In Hand mode, the frequency reference comes from the integrated potentiometer.

[2] 360 degree grounding under a clamp.

[3] Tightening torque = 0.22 N·m / 2 lbf. in

[4] Tightening torque = 0.5 N·m / 4.4 lbf. in.

Actual signals and parameters

What this chapter contains

The chapter describes the actual signals and parameters.

Terms and abbreviations

Term	Definition
Actual signal	Signal measured or calculated by the drive. Can be monitored by the user. No user setting possible. Groups 01...04 contain actual signals.
Def	Parameter default value
Parameter	A user-adjustable operation instruction of the drive. Groups 10...99 contain parameters.

Default parameter values with different macros

When application macro is changed (*9902* APPLIC MACRO), the software updates the parameter values to their default values. The following table includes the parameter default values for different macros. For other parameters, the default values are the same for all macros (see section *Actual signals* on page *70*).

Index	Name/Selection	ABB STANDARD	3-WIRE	ALTERNATE	MOTOR POT	HAND/AUTO
1001	EXT1 COMMANDS	2 = DI1,2	4 = DI1P,2P,3	9 = DI1F,2R	2 = DI1,2	2 = DI1,2
1002	EXT2 COMMANDS	0 = NOT SEL	0 = NOT SEL	0 = NOT SEL	0 = NOT SEL	21 = DI5,4
1102	EXT1/EXT2 SEL	0 = EXT1	0 = EXT1	0 = EXT1	0 = EXT1	3 = DI3
1103	REF1 SELECT	1 = AI1	1 = AI1	1 = AI1	12 = DI3U,4D(NC)	1 = AI1
1106	REF2 SELECT	2 = POT	2 = POT	2 = POT	1 = AI1	2 = POT
1201	CONST SPEED SEL	9 = DI3,4	10 = DI4,5	9 = DI3,4	5 = DI5	0 = NOT SEL
1301	MINIMUM AI1	0%	0%	0%	0%	20%
2201	ACC/DEC 1/2 SEL	5 = DI5	0 = NOT SEL	5 = DI5	0 = NOT SEL	0 = NOT SEL
9902	APPLIC MACRO	1 = ABB STANDARD	2 = 3-WIRE	3 = ALTERNATE	4 = MOTOR POT	5 = HAND/AUTO

Parameters in the Short Parameter mode

The following table describes the parameters that are visible in the Short Parameter mode. See section *Parameter modes* on page *53* for how to select the parameter mode. All parameters are presented in detail in section *Parameters in the Long Parameter mode*, starting on page *72*.

Parameters in the Short Parameter mode			
No.	**Name/Value**	**Description**	**Def**
99 START-UP DATA		Application macro. Definition of motor set-up data.	
9902	APPLIC MACRO	Selects the application macro or activates FlashDrop parameter values. See chapter *Application macros*.	1 = ABB STANDARD
	1 = ABB STANDARD	Standard macro for constant speed applications	
	2 = 3-WIRE	3-wire macro for constant speed applications	
	3 = ALTERNATE	Alternate macro for start forward and start reverse applications	
	4 = MOTOR POT	Motor potentiometer macro for digital signal speed control applications	
	5 = HAND/AUTO	Hand/Auto macro to be used when two control devices are connected to the drive: - Device 1 communicates through the interface defined by external control location EXT1. - Device 2 communicates through the interface defined by external control location EXT2. EXT1 or EXT2 is active at a time. Switching between EXT1/2 through digital input.	
	31 = LOAD FD SET	FlashDrop parameter values as defined by the FlashDrop file. FlashDrop is an optional device for fast copying of parameters to unpowered drives. FlashDrop allows easy customisation of the parameter list, e.g. selected parameters can be hidden. For more information, see *MFDT-01 FlashDrop User's Manual* [3AFE68591074 (English)].	
9905	MOTOR NOM VOLT	Defines the nominal motor voltage. Must be equal to the value on the motor rating plate. The drive cannot supply the motor with a voltage greater than the input power voltage. 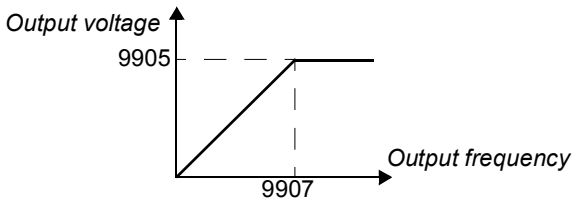 **WARNING!** Never connect a motor to a drive which is connected to power line with voltage level higher than the rated motor voltage.	200 (US: 230) 400 (US: 460)
	100...300 V (200 V / US: 230 V units) 230...690 V (400 V / US: 460 V units)	Voltage. **Note:** The stress on the motor insulations is always dependent on the drive supply voltage. This also applies to the case where the motor voltage rating is lower than the rating of the drive and the supply of the drive.	
9906	MOTOR NOM CURR	Defines the nominal motor current. Must be equal to the value on the motor rating plate.	I_{2N}
	0.2…2.0 · I_{2N}	Current	

Parameters in the Short Parameter mode			
No.	**Name/Value**	**Description**	**Def**
9907	MOTOR NOM FREQ	Defines the nominal motor frequency, i.e the frequency at which the output voltage equals the motor nominal voltage: Field weakening point = Nom. frequency · Supply voltage / Mot nom. voltage	Eur: 50 / US: 60
	10.0…500.0 Hz	Frequency	
04 FAULT HISTORY		Fault history (read-only)	
0401	LAST FAULT	Fault code of the latest fault. See chapter *Fault tracing* for the codes. 0 = fault history is clear (on panel display = NO RECORD).	-
11 REFERENCE SELECT		Maximum reference	
1105	REF1 MAX	Defines the maximum value for external reference REF1. Corresponds to maximum mA/(V) signal for analog input AI1. 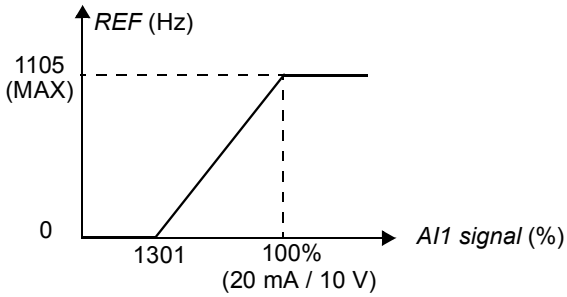 	Eur: 50 / US: 60
	0.0…500.0 Hz	Maximum value	
12 CONSTANT SPEEDS		Constant speeds. Constant speed activation overrides the external speed reference. Constant speed selections are ignored if drive is in local control mode. As default constant speed selection is made through digital inputs DI3 and DI4.1 = DI active, 0 = DI inactive. **DI3 / DI4 / Operation** 0 / 0 / No constant speed 1 / 0 / Speed defined by parameter 1202 CONST SPEED 1 0 / 1 / Speed defined by parameter 1203 CONST SPEED 2 1 / 1 / Speed defined by parameter 1204 CONST SPEED 3	
1202	CONST SPEED 1	Defines constant speed 1 (i.e. drive output frequency).	Eur: 5 / US: 6
	0.0…500.0 Hz	Output frequency	
1203	CONST SPEED 2	Defines constant speed 2 (i.e. drive output frequency).	Eur: 10 / US: 12
	0.0…500.0 Hz	Output frequency	
1204	CONST SPEED 3	Defines constant speed 3 (i.e. drive output frequency).	Eur: 15 / US: 18
	0.0…500.0 Hz	Output frequency	

Parameters in the Short Parameter mode			
No.	**Name/Value**	**Description**	**Def**
13 ANALOG INPUTS		Analog input signal minimum	
1301	MINIMUM AI1	Defines the minimum % value that corresponds to minimum mA/(V) signal for analog input AI1. 0...20 mA ≙ 0...100% 4...20 mA ≙ 20...100% When analog input AI1 is selected as the source for external reference REF1, the value corresponds to the minimum reference value, i.e. 0 Hz. See the figure for parameter *1105* REF1 MAX.	0%
	0…100.0%	Value in percent of the full signal range. Example: If the minimum value for analog input is 4 mA, the percent value for 0…20 mA range is: (4 mA / 20 mA) · 100% = 20%	
20 LIMITS		Maximum frequency	
2008	MAXIMUM FREQ	Defines the maximum limit for the drive output frequency. 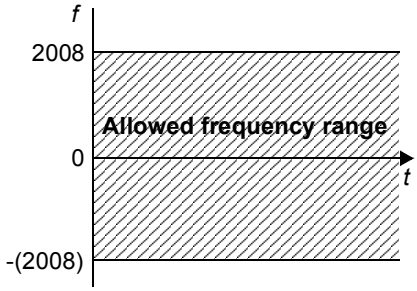 	Eur: 50 / US: 60
	0.0…500.0 Hz	Maximum frequency	
21 START/STOP		Stop mode of the motor	
2102	STOP FUNCTION	Selects the motor stop function.	1 = COAST
	1 = COAST	Stop by cutting off the motor power supply. The motor coasts to a stop.	
	2 = RAMP	Stop along a linear ramp. See parameter group *22 ACCEL/DECEL*.	
22 ACCEL/DECEL		Acceleration and deceleration times	
2202	ACCELER TIME 1	Defines the acceleration time 1 i.e. the time required for the speed to change from zero to the speed defined by parameter *2008* MAXIMUM FREQ. - If the speed reference increases faster than the set acceleration rate, the motor speed will follow the acceleration rate. - If the speed reference increases slower than the set acceleration rate, the motor speed will follow the reference signal. - If the acceleration time is set too short, the drive will automatically prolong the acceleration in order not to exceed the drive operating limits.	5
	0.0…1800.0 s	Time	

Parameters in the Short Parameter mode			
No.	**Name/Value**	**Description**	**Def**
2203	DECELER TIME 1	Defines the deceleration time 1 i.e. the time required for the speed to change from the value defined by parameter *2008* MAXIMUM FREQ to zero. - If the speed reference decreases slower than the set deceleration rate, the motor speed will follow the reference signal. - If the reference changes faster than the set deceleration rate, the motor speed will follow the deceleration rate. - If the deceleration time is set too short, the drive will automatically prolong the deceleration in order not to exceed drive operating limits. If a short deceleration time is needed for a high inertia application, the drive should be equipped a brake resistor.	5
	0.0…1800.0 s	Time	

Actual signals

The following table includes the descriptions of all actual signal.

Actual signals		
No.	**Name/Value**	**Description**
01 OPERATING DATA		Basic signals for monitoring the drive (read-only). For actual signal supervision, see parameter group *32 SUPERVISION*. For selection of an actual signal to be displayed on the control panel, see parameter group *34 PANEL DISPLAY*.
0101	SPEED & DIR	Calculated motor speed in rpm. A negative value indicates reverse direction.
0102	SPEED	Calculated motor speed in rpm.
0103	OUTPUT FREQ	Calculated drive output frequency in Hz. (Shown by default on the panel Output mode display.)
0104	CURRENT	Measured motor current in A
0105	TORQUE	Calculated motor torque in percent of the motor nominal torque
0106	POWER	Measured motor power in kW
0107	DC BUS VOLTAGE	Measured intermediate circuit voltage in VDC
0109	OUTPUT VOLTAGE	Calculated motor voltage in VAC
0110	DRIVE TEMP	Measured IGBT temperature in °C
0111	EXTERNAL REF 1	External reference REF1 in Hz
0112	EXTERNAL REF 2	External reference REF2 in percent. 100% equals the maximum motor speed.
0113	CTRL LOCATION	Active control location. (0) LOCAL; (1) EXT1; (2) EXT2.
0114	RUN TIME (R)	Elapsed drive running time counter (hours). The counter can be reset by pressing the UP and DOWN buttons simultaneously when the control panel is in Parameter mode.
0115	KWH COUNTER (R)	kWh counter. The counter can be reset by pressing UP and DOWN buttons simultaneously when the control panel is in Parameter mode.
0120	AI1	Relative value of analog input AI1 in percent
0121	POT	Potentiometer value in percent
0137	PROCESS VAR 1	Process variable 1 defined by parameter group *34 PANEL DISPLAY*
0138	PROCESS VAR 2	Process variable 2 defined by parameter group *34 PANEL DISPLAY*
0139	PROCESS VAR 3	Process variable 3 defined by parameter group *34 PANEL DISPLAY*
0140	RUN TIME	Elapsed time counter (thousands of hours). Runs when the drive is running. Counter cannot be reset.
0141	MWH COUNTER	MWh counter. Counter cannot be reset.
0142	REVOLUTION CNTR	Motor revolution counter (millions of revolutions). The counter can be reset by pressing the UP and DOWN buttons simultaneously when the control panel is in Parameter mode.
0143	DRIVE ON TIME HI	Drive control board power-on time in days. Counter cannot be reset.
0144	DRIVE ON TIME LO	Drive control board power-on time in 2 second ticks (30 ticks = 60 seconds). Counter cannot be reset.
0160	DI 1-5 STATUS	Status of digital inputs. Example: 10000 = DI1 is on, DI2...DI5 are off.
0161	PULSE INPUT FREQ	Value of frequency input in Hz
0162	RO STATUS	Status of relay output. 1 = RO is energised, 0 = RO is de-energized.

Actual signals		
No.	**Name/Value**	**Description**
04 FAULT HISTORY		Fault history (read-only)
0401	LAST FAULT	Fault code of the latest fault. See chapter *Fault tracing* for the codes. 0 = fault history is clear (on panel display = NO RECORD).
0402	FAULT TIME 1	Day on which the latest fault occurred. Format: The number of days elapsed after power-on.
0403	FAULT TIME 2	Time at which the latest fault occurred. Format: Time elapsed after power-on in 2 second ticks (minus the whole days stated by signal *0402* FAULT TIME 1). 30 ticks = 60 seconds. E.g. Value 514 equals 17 minutes and 8 seconds (= 514/30).
0404	SPEED AT FLT	Motor speed in rpm at the time the latest fault occurred
0405	FREQ AT FLT	Frequency in Hz at the time the latest fault occurred
0406	VOLTAGE AT FLT	Intemediate circuit voltage in VDC at the time the latest fault occurred
0407	CURRENT AT FLT	Motor current in A at the time the latest fault occurred
0408	TORQUE AT FLT	Motor torque in percent of the motor nominal torque at the time the latest fault occurred
0409	STATUS AT FLT	Drive status in hexadecimal format at the time the latest fault occurred
0412	PREVIOUS FAULT 1	Fault code of the 2nd latest fault. See chapter *Fault tracing* for the codes.
0413	PREVIOUS FAULT 2	Fault code of the 3rd latest fault. See chapter *Fault tracing* for the codes.
0414	DI 1-5 AT FLT	Status of digital inputs DI1…5 at the time the latest fault occurred. Example: 10000 = DI1 is on, DI2...DI5 are off.

Parameters in the Long Parameter mode

The following table includes the complete descriptions of all parameters that are visible only in the Long Parameter mode. See section *Parameter modes* on page *53* for how to select the parameter mode.

Parameters in the Long Parameter mode			
Index	**Name/Selection**	**Description**	**Def**
10 START/STOP/DIR		The sources for external start, stop and direction control	
1001	EXT1 COMMANDS	Defines the connections and the source for the start, stop and direction commands for external control location 1 (EXT1).	2 = DI1,2
	0 = NOT SEL	No start, stop and direction command source	
	1 = DI1	Start and stop through digital input DI1. 0 = stop, 1 = start. Direction is fixed according to parameter *1003* DIRECTION (setting REQUEST = FORWARD).	
	2 = DI1,2	Start and stop through digital input DI1. 0 = stop, 1 = start. Direction through digital input DI2. 0 = forward, 1 = reverse. To control direction, parameter *1003* DIRECTION setting must be REQUEST.	
	3 = DI1P,2P	Pulse start through digital input DI1. 0 -> 1: Start. (In order to start the drive, digital input DI2 must be activated prior to the pulse fed to DI1.) Pulse stop through digital input DI2. 1 -> 0: Stop. Direction of rotation is fixed according to parameter *1003* DIRECTION (setting REQUEST = FORWARD).	
	4 = DI1P,2P,3	Pulse start through digital input DI1. 0 -> 1: Start. (In order to start the drive, digital input DI2 must be activated prior to the pulse fed to DI1.) Pulse stop through digital input DI2. 1 -> 0: Stop. Direction through digital input DI3. 0 = forward, 1 = reverse. To control direction, parameter *1003* DIRECTION setting must be REQUEST.	
	5 = DI1P,2P,3P	Pulse start forward through digital input DI1. 0 -> 1: Start forward. Pulse start reverse through digital input DI2. 0 -> 1: Start reverse. (In order to start the drive, digital input DI3 must be activated prior to the pulse fed to DI1/DI2). Pulse stop through digital input DI3. 1 -> 0: Stop. To control the direction, parameter *1003* DIRECTION setting must be REQUEST.	
	8 = KEYPAD	Start, stop and direction commands through control panel when EXT1 is active. To control the direction, parameter *1003* DIRECTION setting must be REQUEST.	
	9 = DI1F,2R	Start, stop and direction commands through digital inputs DI1 and DI2. **DI1 / DI2 / Operation** 0 / 0 / Stop 1 / 0 / Start forward 0 / 1 / Start reverse 1 / 1 / Stop Parameter *1003* DIRECTION setting must be REQUEST.	
	20 = DI5	Start and stop through digital input DI5. 0 = stop, 1 = start. Direction is fixed according to parameter *1003* DIRECTION (setting REQUEST = FORWARD).	
	21 = DI5,4	Start and stop through digital input DI5. 0 = stop, 1 = start. Direction through digital input DI4. 0 = forward, 1 = reverse. To control direction, parameter *1003* DIRECTION setting must be REQUEST.	
1002	EXT2 COMMANDS	Defines the connections and the source for the start, stop and direction commands for external control location 2 (EXT2).	0 = NOT SEL
		See parameter *1001* EXT1 COMMANDS.	
1003	DIRECTION	Enables the control of rotation direction of the motor, or fixes the direction.	3 = REQUEST

Parameters in the Long Parameter mode			
Index	**Name/Selection**	**Description**	**Def**
	1 = FORWARD	Fixed to forward	
	2 = REVERSE	Fixed to reverse	
	3 = REQUEST	Direction of rotation control allowed	
1010	JOGGING SEL	Defines the signal that activates the jogging function. The jogging function is typically used to control a cyclical movement of a machine section. One push button controls the drive through the whole cycle: When it is on, the drive starts, accelerates to a preset speed at a preset rate. When it is off, the drive decelerates to zero speed at a preset rate. The figure below describes the operation of the drive. It also represent how the drive shifts to normal operation (= jogging inactive) when the drive start command is switched on. Jog cmd = state of the jogging input, Start cmd = state of the drive start command.	0 = NOT SEL

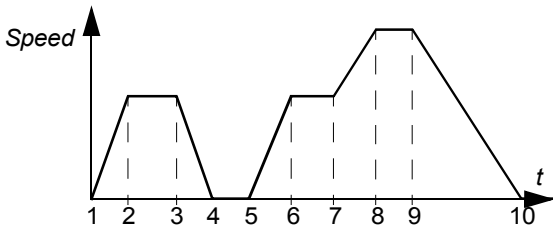

Phase	Jog cmd	Start cmd	Description
1-2	1	0	Drive accelerates to the jogging speed along the acceleration ramp of the jogging function.
2-3	1	0	Drive runs at the jogging speed.
3-4	0	0	Drive decelerates to zero speed along the deceleration ramp of the jogging function.
4-5	0	0	Drive is stopped.
5-6	1	0	Drive accelerates to the jogging speed along the acceleration ramp of the jogging function.
6-7	1	0	Drive runs at the jogging speed.
7-8	x	1	Normal operation overrides the jogging. Drive accelerates to the speed reference along the active acceleration ramp.
8-9	x	1	Normal operation overrides the jogging. Drive follows the speed reference.
9-10	0	0	Drive decelerates to zero speed along the active deceleration ramp.
10-	0	0	Drive is stopped.
x = State can be either 1 or 0.			

Note: The jogging is not operational when the drive start command is on.

Note: The jogging speed overrides the constant speeds (*12 CONSTANT SPEEDS*).

Note: The ramp shape time (*2207* RAMP SHAPE 2) must be set to zero during jogging (i.e. linear ramp).

Jogging speed is defined by parameter *1208* CONST SPEED 7, acceleration and deceleration times are defined by parameters *2205* ACCELER TIME 2 and *2206* DECERLER TIME 2. See also parameter *2112* ZERO SPEED DELAY.

	1 = DI1	Digital input DI1. 0 = jogging inactive, 1 = jogging active.	
	2 = DI2	See selection DI1.	

Parameters in the Long Parameter mode			
Index	**Name/Selection**	**Description**	**Def**
	3 = DI3	See selection DI1.	
	4 = DI4	See selection DI1.	
	5 = DI5	See selection DI1.	
	0 = NOT SEL	Not selected	
	-1 = DI1(INV)	Inverted digital input DI1. 1 = jogging inactive, 0 = jogging active.	
	-2 = DI2(INV)	See selection DI1(INV).	
	-3 = DI3(INV)	See selection DI1(INV).	
	-4 = DI4(INV)	See selection DI1(INV).	
	-5 = DI5(INV)	See selection DI1(INV).	
11 REFERENCE SELECT		Panel reference type, local reference source, external control location selection and external reference sources and limits The drive can accept a variety of references in addition to the conventional analog input, potentiometer and control panel signals: - The drive reference can be given with two digital inputs: One digital input increases the speed, the other decreases it. - The drive can form a reference out of analog input and potentiometer signals by using mathematical functions: Addition, subtraction. - The drive reference can be given with a frequency input. It is possible to scale the external reference so that the signal minimum and maximum values correspond to a speed other than the minimum and maximum speed limits.	
1101	KEYPAD REF SEL	Selects the type of the reference in local control mode.	1 = REF1
	1 = REF1(Hz)	Frequency reference	
	2 = REF2(%)	%-reference	
1102	EXT1/EXT2 SEL	Defines the source from which the drive reads the signal that selects between two external control locations, EXT1 or EXT2.	0 = EXT1
	0 = EXT1	EXT1 active. The control signal sources are defined by parameters *1001* EXT1 COMMANDS and *1103* REF1 SELECT.	
	1 = DI1	Digital input DI1. 0 = EXT1, 1 = EXT2.	
	2 = DI2	See selection DI1.	
	3 = DI3	See selection DI1.	
	4 = DI4	See selection DI1.	
	5 = DI5	See selection DI1.	
	7 = EXT2	EXT2 active. The control signal sources are defined by parameters *1002* EXT2 COMMANDS and *1106* REF2 SELECT.	
	-1 = DI1(INV)	Inverted digital input DI1. 1 = EXT1, 0 = EXT2.	
	-2 = DI2(INV)	See selection DI1(INV).	
	-3 = DI3(INV)	See selection DI1(INV).	
	-4 = DI4(INV)	See selection DI1(INV).	
	-5 = DI5(INV)	See selection DI1(INV).	
1103	REF1 SELECT	Selects the signal source for external reference REF1.	1 = AI1
	0 = KEYPAD	Control panel	
	1 = AI1	Analog input AI1	
	2 = POT	Potentiometer	

Parameters in the Long Parameter mode			
Index	**Name/Selection**	**Description**	**Def**
	3 = AI1/JOYST	Analog input AI1 as joystick. The minimum input signal runs the motor at the maximum reference in the reverse direction, the maximum input at the maximum reference in the forward direction. Minimum and maximum references are defined by parameters *1104* REF1 MIN and *1105* REF1 MAX. **Note:** Parameter *1003* DIRECTION must be set to REQUEST. 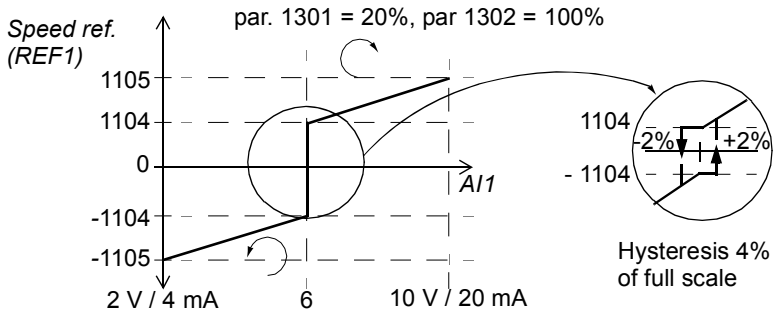 **WARNING!** If parameter *1301* MINIMUM AI1 is set to 0 V and analog input signal is lost (i.e. 0 V), the rotation of the motor is reversed to the maximum reference. Set the following parameters to activate a fault when analog input signal is lost: Set parameter *1301* MINIMUM AI1 to 20% (2 V or 4 mA). Set parameter *3021* AI1 FAULT LIMIT to 5% or higher. Set parameter *3001* AI<MIN FUNCTION to FAULT.	
	5 = DI3U,4D(R)	Digital input 3: Reference increase. Digital input DI4: Reference decrease. Stop command resets the reference to zero. Parameter *2205* ACCELER TIME 2 defines the rate of the reference change.	
	6 = DI3U,4D	Digital input 3: Reference increase. Digital input DI4: Reference decrease. The program stores the active speed reference (not reset by a stop command). When the drive is restarted, the motor ramps up with the selected acceleration rate to the stored reference. Parameter *2205* ACCELER TIME2 defines the rate of the reference change.	
	11 = DI3U,4D(RNC)	Digital input 3: Reference increase. Digital input DI4: Reference decrease. Stop command resets the reference to zero. The reference is not saved if the control source is changed (from EXT1 to EXT2, from EXT2 to EXT1 or from LOC to REM). Parameter *2205* ACCELER TIME 2 defines the rate of the reference change.	
	12 = DI3U,4D(NC)	Digital input 3: Reference increase. Digital input DI4: Reference decrease. The program stores the active speed reference (not reset by a stop command). The reference is not saved if the control source is changed (from EXT1 to EXT2, from EXT2 to EXT1 or from LOC to REM). When the drive is restarted, the motor ramps up with the selected acceleration rate to the stored reference. Parameter *2205* ACCELER TIME 2 defines the rate of the reference change.	
	14 = AI1+POT	Reference is calculated with the following equation: REF = AI1(%) + POT(%) - 50%	
	16 = AI1-POT	Reference is calculated with the following equation: REF = AI1(%) + 50% - POT(%)	
	30 = DI4U,5D	See selection DI3U,4D.	
	31 = DI4U,5D(NC)	See selection DI3U,4D(NC).	
	32 = FREQ INPUT	Frequency input	

Parameters in the Long Parameter mode			
Index	**Name/Selection**	**Description**	**Def**
1104	REF1 MIN	Defines the minimum value for external reference REF1. Corresponds to the minimum setting of the used source signal.	0
	0.0…500.0 Hz	Minimum value. Example: Analog input AI1 is selected as the reference source (value of parameter *1103* REF1 SELECT is AI1). The reference minimum and maximum correspond to the *1301* MINIMUM AI1 and *1302* MAXIMUM AI1 settings as follows: 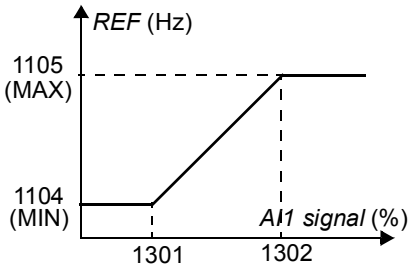 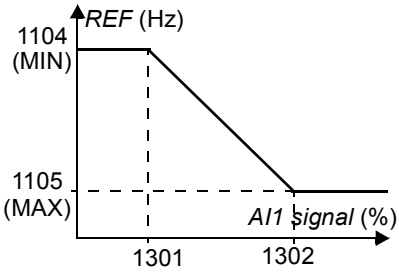	
1105	REF1 MAX	Defines the maximum value for external reference REF1. Corresponds to the maximum setting of the used source signal.	Eur: 50 / US: 60
	0.0…500.0 Hz	Maximum value. See example in parameter *1104* REF1 MIN.	
1106	REF2 SELECT	Selects the signal source for external reference REF2.	2 = POT
	0 = KEYPAD	See parameter *1103* REF1 SELECT.	
	1 = AI1	See parameter *1103* REF1 SELECT.	
	2 = POT	See parameter *1103* REF1 SELECT.	
	3 = AI1/JOYST	See parameter *1103* REF1 SELECT.	
	5 = DI3U,4D(R)	See parameter *1103* REF1 SELECT.	
	6 = DI3U,4D	See parameter *1103* REF1 SELECT.	
	11 = DI3U,4D(RNC)	See parameter *1103* REF1 SELECT.	
	12 = DI3U,4D(NC)	See parameter *1103* REF1 SELECT.	
	14 = AI1+POT	See parameter *1103* REF1 SELECT.	
	16 = AI1-POT	See parameter *1103* REF1 SELECT.	
	30 = DI4U,5D	See parameter *1103* REF1 SELECT.	
	31 = DI4U,5D(NC)	See parameter *1103* REF1 SELECT.	
	32 = FREQ INPUT	See parameter *1103* REF1 SELECT.	
1107	REF2 MIN	Defines the minimum value for external reference REF2. Corresponds to the minimum setting of the used source signal.	0
	0.0…100.0%	Value in percent of the maximum frequency. See example in parameter *1104* REF1 MIN for correspondence to the source signal limits.	
1108	REF2 MAX	Defines the maximum value for external reference REF2. Corresponds to the maximum setting of the used source signal.	100
	0.0…100.0%	Value in percent of the maximum frequency. See example in parameter *1104* REF1 MIN for correspondence to the source signal limits.	
1109	LOC REF SOURCE	Selects the source for the local reference.	0 = POT
	0 = POT	Potentiometer	
	1 = KEYPAD	Control panel	

Parameters in the Long Parameter mode			
Index	**Name/Selection**	**Description**	**Def**
12 CONSTANT SPEEDS		Constant speed selection and values. It is possible to define seven positive constant speeds. Constant speeds are selected with digital inputs. Constant speed activation overrides the external speed reference. Constant speed selections are ignored if drive is in local control mode.	
1201	CONST SPEED SEL	Selects the constant speed activation signal.	9 = DI3,4
	0 = NOT SEL	No constant speed in use	
	1 = DI1	Speed defined by parameter *1202* CONST SPEED 1 is activated through digital input DI1. 1 = active, 0 = inactive.	
	2 = DI2	Speed defined by parameter *1202* CONST SPEED 1 is activated through digital input DI2. 1 = active, 0 = inactive.	
	3 = DI3	Speed defined by parameter *1202* CONST SPEED 1 is activated through digital input DI3. 1 = active, 0 = inactive.	
	4 = DI4	Speed defined by parameter *1202* CONST SPEED 1 is activated through digital input DI4. 1 = active, 0 = inactive.	
	5 = DI5	Speed defined by parameter *1202* CONST SPEED 1 is activated through digital input DI5. 1 = active, 0 = inactive.	
	7 = DI1,2	Constant speed selection through digital inputs DI1 and DI2.1 = DI active, 0 = DI inactive. **DI1 / DI2 / Operation** 0 / 0 / No constant speed 1 / 0 / Speed defined by parameter *1202* CONST SPEED 1 0 / 1 / Speed defined by parameter *1203* CONST SPEED 2 1 / 1 / Speed defined by parameter *1204* CONST SPEED 3	
	8 = DI2,3	See selection DI1,2.	
	9 = DI3,4	See selection DI1,2.	
	10 = DI4,5	See selection DI1,2.	
	12 = DI1,2,3	Constant speed selection through digital inputs DI1, DI2 and DI3. 1 = DI active, 0 = DI inactive. **DI1 / DI2 / DI3 / Operation** 0 / 0 / 0 / No constant speed 1 / 0 / 0 / Speed defined by parameter *1202* CONST SPEED 1 0 / 1 / 0 / Speed defined by parameter *1203* CONST SPEED 2 1 / 1 / 0 / Speed defined by parameter *1204* CONST SPEED 3 0 / 0 / 1 / Speed defined by parameter *1205* CONST SPEED 4 1 / 0 / 1 / Speed defined by parameter *1206* CONST SPEED 5 0 / 1 / 1 / Speed defined by parameter *1207* CONST SPEED 6 1 / 1 / 1 / Speed defined by parameter *1208* CONST SPEED 7	
	13 = DI3,4,5	See selection DI1,2,3.	
	-1 = DI1(INV)	Speed defined by parameter *1202* CONST SPEED 1 is activated through inverted digital input DI1. 0 = active, 1 = inactive.	
	-2 = DI2(INV)	Speed defined by parameter *1202* CONST SPEED 1 is activated through inverted digital input DI2. 0 = active, 1 = inactive.	
	-3 = DI3(INV)	Speed defined by parameter *1202* CONST SPEED 1 is activated through inverted digital input DI3. 0 = active, 1 = inactive.	
	-4 = DI4(INV)	Speed defined by parameter *1202* CONST SPEED 1 is activated through inverted digital input DI4. 0 = active, 1 = inactive.	

Parameters in the Long Parameter mode			
Index	**Name/Selection**	**Description**	**Def**
	-5 = DI5(INV)	Speed defined by parameter *1202* CONST SPEED 1 is activated through inverted digital input DI5. 0 = active, 1 = inactive.	
	-7 = DI1,2 (INV)	Constant speed selection through inverted digital inputs DI1 and DI2. 1 = DI active, 0 = DI inactive. **DI1 / DI2 / Operation** 1 / 1 / No constant speed 0 / 1 / Speed defined by parameter *1202* CONST SPEED 1 1 / 0 / Speed defined by parameter *1203* CONST SPEED 2 0 / 0 / Speed defined by parameter *1204* CONST SPEED 3	
	-8 = DI2,3 (INV)	See selection DI1,2 (INV).	
	-9 = DI3,4 (INV)	See selection DI1,2 (INV).	
	-10 = DI4,5 (INV)	See selection DI1,2 (INV).	
	-12 = DI1,2,3 (INV)	Constant speed selection through inverted digital inputs DI1, DI2 and DI3. 1 = DI active, 0 = DI inactive. **DI1 / DI2 / DI3 / Operation** 1 / 1 / 1 / No constant speed 0 / 1 / 1 / Speed defined by parameter *1202* CONST SPEED 1 1 / 0 / 1 / Speed defined by parameter *1203* CONST SPEED 2 0 / 0 / 1 / Speed defined by parameter *1204* CONST SPEED 3 1 / 1 / 0 / Speed defined by parameter *1205* CONST SPEED 4 0 / 1 / 0 / Speed defined by parameter *1206* CONST SPEED 5 1 / 0 / 0 / Speed defined by parameter *1207* CONST SPEED 6 0 / 0 / 0 / Speed defined by parameter *1208* CONST SPEED 7	
	-13 = DI3,4,5 (INV)	See selection DI1,2,3(INV).	
1202	CONST SPEED 1	Defines constant speed 1 (i.e. drive output frequency).	Eur: 5 / US: 6
	0.0…500.0 Hz	Output frequency	
1203	CONST SPEED 2	Defines constant speed 2 (i.e. drive output frequency).	Eur: 10 / US: 12
	0.0…500.0 Hz	Output frequency	
1204	CONST SPEED 3	Defines constant speed 3 (i.e. drive output frequency).	Eur: 15 / US: 18
	0.0…500.0 Hz	Output frequency	
1205	CONST SPEED 4	Defines constant speed 4 (i.e. drive output frequency).	Eur: 20 / US: 24
	0.0…500.0 Hz	Output frequency	
1206	CONST SPEED 5	Defines constant speed 5 (i.e. drive output frequency).	Eur: 25 / US: 30
	0.0…500.0 Hz	Output frequency	
1207	CONST SPEED 6	Defines constant speed 6 (i.e. drive output frequency).	Eur: 40 / US: 48
	0.0…500.0 Hz	Output frequency	
1208	CONST SPEED 7	Defines constant speed 7 (i.e. drive output frequency). Note that constant speed 7 may be used also as jogging speed (*1010* JOGGING SEL) and with fault function *3001* AI<MIN FUNCTION.	Eur: 50 / US: 60
	0.0…500.0 Hz	Output frequency	

Parameters in the Long Parameter mode			
Index	**Name/Selection**	**Description**	**Def**
13 ANALOG INPUTS		Analog input signal processing	
1301	MINIMUM AI1	Defines the minimum %-value that corresponds to minimum mA/(V) signal for analog input AI1. When used as a reference, the value corresponds to the reference minimum setting. 0...20 mA ≙ 0...100% 4...20 mA ≙ 20...100% Example: If AI1 is selected as the source for external reference REF1, this value corresponds to the value of parameter *1104* REF1 MIN. **Note:** MINIMUM AI value must not exceed MAXIMUM AI value.	0%
	0…100.0%	Value in percent of the full signal range. Example: If the minimum value for analog input is 4 mA, the percent value for 0…20 mA range is: (4 mA / 20 mA) · 100% = 20%	
1302	MAXIMUM AI1	Defines the maximum %-value that corresponds to maximum mA/(V) signal for analog input AI1. When used as a reference, the value corresponds to the reference maximum setting. 0...20 mA ≙ 0...100% 4...20 mA ≙ 20...100% Example: If AI1 is selected as the source for external reference REF1, this value corresponds to the value of parameter *1105* REF1 MAX.	100
	0…100.0%	Value in percent of the full signal range. Example: If the maximum value for analog input is 10 mA, the percent value for 0…20 mA range is: (10 mA / 20 mA) · 100% = 50%	
1303	FILTER AI1	Defines the filter time constant for analog input AI1, i.e the time within 63% of a step change is reached. 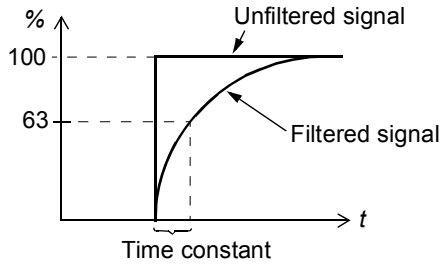 	0.1
	0.0…10.0 s	Filter time constant	
14 RELAY OUTPUTS		Status information indicated through relay output and relay operating delays	
1401	RELAY OUTPUT 1	Selects a drive status indicated through relay output RO. The relay energises when the status meets the setting.	3 = FAULT(-1)
	0 = NOT SEL	Not used	
	1 = READY	Ready to function: Run Enable signal on, no fault, supply voltage within acceptable range and emergency stop signal off.	
	2 = RUN	Running: Start signal on, Run Enable signal on, no active fault.	
	3 = FAULT(-1)	Inverted fault. Relay is de-energised on a fault trip.	
	4 = FAULT	Fault	
	5 = ALARM	Alarm	
	6 = REVERSED	Motor rotates in reverse direction.	

Parameters in the Long Parameter mode			
Index	**Name/Selection**	**Description**	**Def**
	7 = STARTED	The drive has received a start command. Relay is energized even if Run Enable signal is off. Relay is de-energized when drive receives a stop command or a fault occurs.	
	8 = SUPRV 1 OVER	Status according to supervision parameters *3201*...*3203*.	
	9 = SUPRV 1 UNDER	See selection SUPRV 1 OVER.	
	10 = SUPRV 2 OVER	Status according to supervision parameters *3204*...*3206*.	
	11 = SUPRV 2 UNDER	See selection SUPRV 2 OVER.	
	12 = SUPRV 3 OVER	Status according to supervision parameters *3207*...*3209*.	
	13 = SUPRV 3 UNDER	See selection SUPRV 3 OVER.	
	14 = AT SET POINT	Output frequency is equal to the reference frequency.	
	15 = FAULT(RST)	Fault. Automatic reset after the autoreset delay. See parameter group *31 AUTOMATIC RESET*.	
	16 = FLT/ALARM	Fault or alarm	
	17 = EXT CTRL	Drive is under external control.	
	18 = REF 2 SEL	External reference REF2 is in use.	
	19 = CONST FREQ	A constant speed is in use. See parameter group *12 CONSTANT SPEEDS*.	
	20 = REF LOSS	Reference or active control location is lost.	
	21 = OVERCURRENT	Alarm/Fault by overcurrent protection function	
	22 = OVERVOLTAGE	Alarm/Fault by overvoltage protection function	
	23 = DRIVE TEMP	Alarm/Fault by drive overtemperature protection function	
	24 =UNDERVOLTAGE	Alarm/Fault by undervoltage protection function	
	25 = AI1 LOSS	Analog input AI1 signal is lost.	
	27 = MOTOR TEMP	Alarm/Fault by motor overtemperature protection function. See parameter *3005* MOT THERM PROT.	
	28 = STALL	Alarm/Fault by stall protection function. See parameter *3010* STALL FUNCTION.	
	29 = UNDERLOAD	Alarm/Fault by underload protection function. See parameter *3013* UNDERLOAD FUNC.	
	33 = FLUX READY	Motor is magnetised and able to supply nominal torque.	
1404	RO1 ON DELAY	Defines the operation delay for relay output RO.	0
	0.0…3600.0 s	Delay time. The figure below illustrates the operation (on) and release (off) delays for relay output RO. 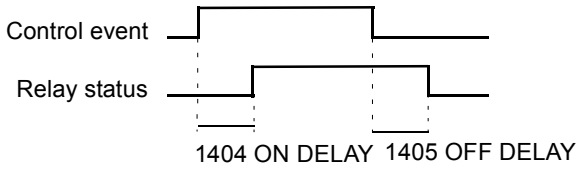	
1405	RO1 OFF DELAY	Defines the release delay for relay output RO.	0
	0.0…3600.0 s	Delay time. See the figure for parameter *1404* RO1 ON DELAY.	

Parameters in the Long Parameter mode			
Index	**Name/Selection**	**Description**	**Def**
16 SYSTEM CONTROLS		Run Enable, parameter lock etc.	
1601	RUN ENABLE	Selects a source for the external Run Enable signal.	0 = NOT SEL
	0 = NOT SEL	Allows the drive to start without an external Run Enable signal.	
	1 = DI1	External signal required through digital input DI1. 1 = Run Enable. If Run Enable signal is switched off, the drive will not start or coasts to stop if it is running.	
	2 = DI2	See selection DI1.	
	3 = DI3	See selection DI1.	
	4 = DI4	See selection DI1.	
	5 = DI5	See selection DI1.	
	-1 = DI1(INV)	External signal required through inverted digital input DI1. 0 = Run Enable. If Run Enable signal is switched on, the drive will not start or coasts to stop if it is running.	
	-2 = DI2(INV)	See selection DI1(INV)	
	-3 = DI3(INV)	See selection DI1(INV)	
	-4 = DI4(INV)	See selection DI1(INV)	
	-5 = DI5(INV)	See selection DI1(INV)	
1602	PARAMETER LOCK	Selects the state of the parameter lock. The lock prevents parameter changing from control panel.	1 = OPEN
	0 = LOCKED	Parameter values cannot be changed from the control panel. The lock can be opened by entering the valid code to parameter *1603* PASS CODE. The lock does not prevent parameter changes made by macros.	
	1 = OPEN	The lock is open. Parameter values can be changed.	
	2 = NOT SAVED	Parameter changes made by control panel are not stored into the permanent memory. To store changed parameter values, set parameter *1607* PARAM SAVE value to SAVE.	
1603	PASS CODE	Selects the pass code for the parameter lock (see parameter *1602* PARAMETER LOCK).	0
	0…65535	Pass code. Setting 358 opens the lock. The value reverts back to 0 automatically.	
1604	FAULT RESET SEL	Selects the source for the fault reset signal. The signal resets the drive after a fault trip if the cause of the fault no longer exists.	0 = KEYPAD
	0 = KEYPAD	Fault reset only from the control panel	
	1 = DI1	Reset through digital input DI1 (reset by a rising edge of DI1) or by control panel	
	2 = DI2	See selection DI1.	
	3 = DI3	See selection DI1.	
	4 = DI4	See selection DI1.	
	5 = DI5	See selection DI1.	
	7 = START/STOP	Reset along with the stop signal received through a digital input, or by control panel.	
	-1 = DI1(INV)	Reset through inverted digital input DI1 (reset by a falling edge of DI1) or by control panel	
	-2 = DI2(INV)	See selection DI1(INV).	

Parameters in the Long Parameter mode			
Index	**Name/Selection**	**Description**	**Def**
	-3 = DI3(INV)	See selection DI1(INV).	
	-4 = DI4(INV)	See selection DI1(INV).	
	-5 = DI5(INV)	See selection DI1(INV).	
1606	LOCAL LOCK	Disables entering local control mode or selects the source for the local control mode lock signal. When local lock is active, entering the local control mode is disabled (LOC/REM key of the panel).	0 = NOT SEL
	0 = NOT SEL	Local control is allowed.	
	1 = DI1	Local control mode lock signal through digital input DI1. Rising edge of digital input DI1: Local control disabled. Falling edge of digital input DI1: Local control allowed.	
	2 = DI2	See selection DI1.	
	3 = DI3	See selection DI1.	
	4 = DI4	See selection DI1.	
	5 = DI5	See selection DI1.	
	7 = ON	Local control is disabled.	
	-1 = DI1(INV)	Local lock through inverted digital input DI1. Rising edge of inverted digital input DI1: Local control allowed. Falling edge of inverted digital input DI1: Local control disabled.	
	-2 = DI2(INV)	See selection DI1(INV).	
	-3 = DI3(INV)	See selection DI1(INV).	
	-4 = DI4(INV)	See selection DI1(INV).	
	-5 = DI5(INV)	See selection DI1(INV).	
1607	PARAM SAVE	Saves the valid parameter values into the permanent memory.	0 = DONE
	0 = DONE	Saving completed	
	1 = SAVE	Saving in progress	
1610	DISPLAY ALARMS	Activates/deactivates alarms OVERCURRENT (code: A2001), OVERVOLTAGE (code: A2002), UNDERVOLTAGE (code: A2003) and DEVICE OVERTEMP (code: A2009). For more information, see chapter *Fault tracing*.	NO
	0 = NO	Alarms are inactive.	
	1 = YES	Alarms are active.	
1611	PARAMETER VIEW	Selects the parameter view **Note:** This parameter is visible only when it is activated by the optional FlashDrop device. FlashDrop allows easy customisation of the parameter list, e.g. selected parameters can be hidden. For more information, see *MFDT-01 FlashDrop User's Manual* [3AFE68591074 (English)]. FlashDrop parameter values are activated by setting parameter *9902* APPLIC MACRO to LOAD FD SET.	0 = DEFAULT
	0 = DEFAULT	Complete long and short parameter lists	
	1 = FLASHDROP	FlashDrop parameter list. Does not include short parameter list. Parameters which are hidden by the FlashDrop device are not visible.	
18 FREQ INPUT		Frequency input signal processing. Digital input DI5 can be programmed as a frequency input. Frequency input can be used as external reference signal source. See parameter *1103*/*1106* REF1/2 SELECT.	
1801	FREQ INPUT MIN	Defines the minimum input value when DI5 is used as a frequency input.	0

Parameters in the Long Parameter mode			
Index	**Name/Selection**	**Description**	**Def**
	0…16000 Hz	Minimum frequency	
1802	FREQ INPUT MAX	Defines the maximum input value when DI5 is used as a frequency input.	1000
	0…16000 Hz	Maximum frequency	
1803	FILTER FREQ IN	Defines the filter time constant for frequency input, i.e the time within 63% of a step change is reached.	0.1
	0.0…10.0 s	Filter time constant	
20 LIMITS		Drive operation limits	
2003	MAX CURRENT	Defines the allowed maximum motor current.	$1.8 \cdot I_{2N}$
	$0.0…1.8 \cdot I_{2N}$ A	Current	
2005	OVERVOLT CTRL	Activates or deactivates the overvoltage control of the intermediate DC link. Fast braking of a high inertia load causes the voltage to rise to the overvoltage control limit. To prevent the DC voltage from exceeding the limit, the overvoltage controller automatically decreases the braking torque. **Note:** If a brake chopper and resistor are connected to the drive, the controller must be off (selection DISABLE) to allow chopper operation.	1 = ENABLE
	0 = DISABLE	Overvoltage control deactivated	
	1 = ENABLE	Overvoltage control activated	
2006	UNDERVOLT CTRL	Activates or deactivates the undervoltage control of the intermediate DC link. If the DC voltage drops due to input power cut off, the undervoltage controller will automatically decrease the motor speed in order to keep the voltage above the lower limit. By decreasing the motor speed, the inertia of the load will cause regeneration back into the drive, keeping the DC link charged and preventing an undervoltage trip until the motor coasts to stop. This will act as a power-loss ride-through functionality in systems with a high inertia, such as a centrifuge or a fan.	1 = ENABLE (TIME)
	0 = DISABLE	Undervoltage control deactivated	
	1 = ENABLE(TIME)	Undervoltage control activated. The undervoltage control is active for 500 ms.	
	2 = ENABLE	Undervoltage control activated. No operation time limit.	
2007	MINIMUM FREQ	Defines the minimum limit for the drive output frequency. A positive (or zero) minimum frequency value defines two ranges, one positive and one negative. A negative minimum frequency value defines one speed range. **Note:** MINIMUM FREQ value must not exceed MAXIMUM FREQ value. 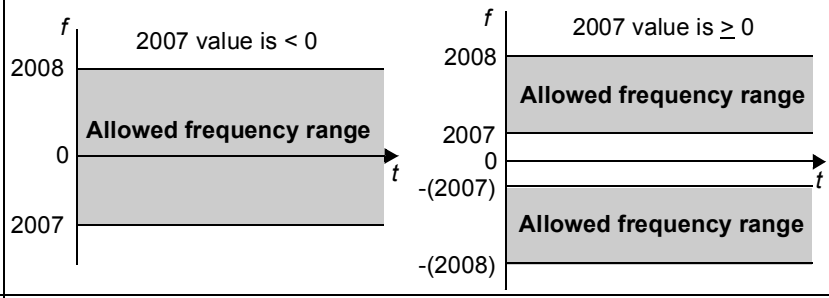 	0
	-500.0…500.0 Hz	Minimum frequency	
2008	MAXIMUM FREQ	Defines the maximum limit for the drive output frequency.	Eur: 50 / US: 60
	0.0…500.0 Hz	Maximum frequency. See parameter *2007* MINIMUM FREQ.	

Parameters in the Long Parameter mode			
Index	**Name/Selection**	**Description**	**Def**
21 START/STOP		Start and stop modes of the motor	
2101	START FUNCTION	Selects the motor starting method.	1 = AUTO
	1 = AUTO	Frequency reference ramps immediately from 0 Hz.	
	2 = DC MAGN	The drive pre-magnetises the motor with DC current before the start. The pre-magnetising time is defined by parameter *2103* DC MAGN TIME. **Note:** Starting to a rotating machine is not possible when DC MAGN is selected. **WARNING!** The drive will start after the set pre-magnetising time has passed even if the motor magnetisation is not completed. Ensure always in applications where a full break-away torque is essential, that the constant magnetising time is long enough to allow generation of full magnetisation and torque.	
	4 = TORQ BOOST	Torque boost should be selected if a high break-away torque is required. The drive pre-magnetises the motor with DC current before the start. The pre-magnetising time is defined by parameter *2103* DC MAGN TIME. Torque boost is applied at start. Torque boost is stopped when output frequency exceeds 20 Hz or when it is equal to the reference value. See parameter *2110* TORQ BOOST CURR. **Note:** Starting to a rotating machine is not possible when TORQ BOOST is selected. **WARNING!** The drive will start after the set pre-magnetising time has passed although the motor magnetisation is not completed. Ensure always in applications where a full break-away torque is essential, that the constant magnetising time is long enough to allow generation of full magnetisation and torque.	
	6 = SCAN START	Frequency scanning flying start (starting to a rotating machine). Based on frequency scanning (interval *2008* MAXIMUM FREQ...*2007* MINIMUM FREQ) to identify the frequency. If frequency identification fails, DC magnetisation is used (see selection DC MAGN).	
	7 = SCAN+BOOST	Combines frequency scanning flying start (starting to a rotating machine) and torque boost. See selections SCAN START and TORQ BOOST. If frequency identification fails, torque boost is used.	
2102	STOP FUNCTION	Selects the motor stop function.	1 = COAST
	1 = COAST	Stop by cutting off the motor power supply. The motor coasts to a stop.	
	2 = RAMP	Stop along a ramp. See parameter group *22 ACCEL/DECEL*.	
2103	DC MAGN TIME	Defines the pre-magnetising time. See parameter *2101* START FUNCTION. After the start command, the drive automatically pre-magnetises the motor the set time.	0.3
	0.00…10.00 s	Magnetising time. Set this value long enough to allow full motor magnetisation. Too long time heats the motor excessively.	
2104	DC HOLD CTL	Activates the DC braking function.	0 = NOT SEL
	0 = NOT SEL	Inactive	
	2 = DC BRAKING	DC current braking function active. If parameter *2102* STOP FUNCTION is set to COAST, DC braking is applied after the start command is removed. If parameter *2102* STOP FUNCTION is set to RAMP, DC braking is applied after the ramp.	

Parameters in the Long Parameter mode			
Index	**Name/Selection**	**Description**	**Def**
2106	DC CURR REF	Defines the DC braking current. See parameter *2104* DC HOLD CTL.	30
	0…100%	Value in percent of the motor nominal current (parameter *9906* MOTOR NOM CURR)	
2107	DC BRAKE TIME	Defines the DC braking time.	0
	0.0…250.0 s	Time	
2108	START INHIBIT	Enables the start inhibit function. Drive start is inhibited if - fault is reset. - Run Enable signal activates while the start command is active. See parameter *1601* RUN ENABLE. - control mode changes from local to remote. - external control mode switches from EXT1 to EXT2 or from EXT2 to EXT1.	0 = OFF
	0 = OFF	Disabled	
	1 = ON	Enabled	
2109	EMER STOP SEL	Selects the source for the external emergency stop command. The drive cannot be restarted before the emergency stop command is reset. **Note:** The installation must include emergency stop devices and any other safety equipment that may be needed. Pressing STOP on the drive's control panel does NOT - generate an emergency stop of the motor. - separate the drive from dangerous potential.	0 = NOT SEL
	0 = NOT SEL	Emergency stop function is not selected.	
	1 = DI1	Digital input DI1. 1 = stop along the emergency stop ramp. See parameter *2208* EMER DEC TIME. 0 = emergency stop command reset.	
	2 = DI2	See selection DI1.	
	3 = DI3	See selection DI1.	
	4 = DI4	See selection DI1.	
	5 = DI5	See selection DI1.	
	-1 = DI1(INV)	Inverted digital input DI. 0 = stop along the emergency stop ramp. See parameter *2208* EMER DEC TIME. 1 = emergency stop command reset	
	-2 = DI2(INV)	See selection DI1(INV).	
	-3 = DI3(INV)	See selection DI1(INV).	
	-4 = DI4(INV)	See selection DI1(INV).	
	-5 = DI5(INV)	See selection DI1(INV).	
2110	TORQ BOOST CURR	Defines the maximum supplied current during torque boost. See parameter *2101* START FUNCTION.	100
	15…300%	Value in percent	

Parameters in the Long Parameter mode			
Index	**Name/Selection**	**Description**	**Def**
2112	ZERO SPEED DELAY	Defines the delay for the Zero Speed Delay function. The function is useful in applications where a smooth and quick restarting is essential. During the delay the drive knows accurately the rotor position. **No Zero Speed Delay** **With Zero Speed Delay** 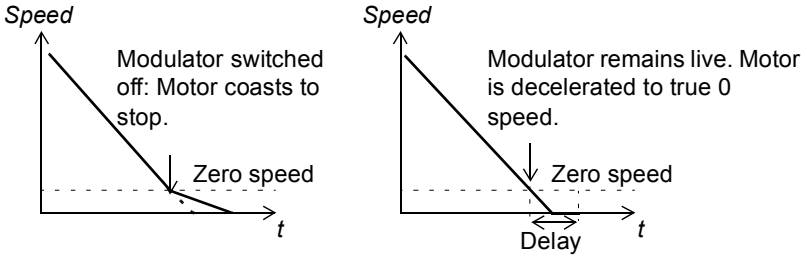 Zero speed delay can be used e.g. with jogging function (parameter *1010* JOGGING SEL). **No Zero Speed Delay** The drive receives a stop command and decelerates along a ramp. When the motor actual speed falls below an internal limit (called Zero speed), the modulator is switched off. The inverter modulation is stopped and the motor coasts to standstill. **With Zero Speed Delay** The drive receives a stop command and decelerates along a ramp. When the actual motor speed falls below an internal limit (called Zero Speed), the zero speed delay function activates. During the delay the functions keeps the modulator live: The inverter modulates, motor is magnetised and the drive is ready for a quick restart.	0
	0.0…60.0 s	Delay time. If parameter value is set to zero, Zero Speed Delay function is disabled.	
22 ACCEL/DECEL		Acceleration and deceleration times	
2201	ACC/DEC 1/2 SEL	Defines the source from which the drive reads the signal that selects between two ramp pairs, acceleration/deceleration pair 1 and 2. Ramp pair 1 is defined by parameters *2202*…*2204*. Ramp pair 2 is defined by parameters *2205*…*2207*.	DI5
	0 = NOT SEL	Ramp pair 1 is used.	
	1 = DI1	Digital input DI1. 1 = ramp pair 2, 0 = ramp pair 1.	
	2 = DI2	See selection DI1.	
	3 = DI3	See selection DI1.	
	4 = DI4	See selection DI1.	
	5 = DI5	See selection DI1.	
	-1 = DI1(INV)	Inverted digital input DI1. 0 = ramp pair 2, 1 = ramp pair 1.	
	-2 = DI2(INV)	See selection DI1(INV).	
	-3 = DI3(INV)	See selection DI1(INV).	
	-4 = DI4(INV)	See selection DI1(INV).	
	-5 = DI5(INV)	See selection DI1(INV).	

Parameters in the Long Parameter mode			
Index	**Name/Selection**	**Description**	**Def**
2202	ACCELER TIME 1	Defines the acceleration time 1 i.e. the time required for the speed to change from zero to the speed defined by parameter *2008* MAXIMUM FREQ. - If the speed reference increases faster than the set acceleration rate, the motor speed will follow the acceleration rate. - If the speed reference increases slower than the set acceleration rate, the motor speed will follow the reference signal. - If the acceleration time is set too short, the drive will automatically prolong the acceleration in order not to exceed the drive operating limits. Actual acceleration time depends on parameter *2204* RAMP SHAPE 1 setting.	5
	0.0…1800.0 s	Time	
2203	DECELER TIME 1	Defines the deceleration time 1 i.e. the time required for the speed to change from the value defined by parameter *2008* MAXIMUM FREQ to zero. - If the speed reference decreases slower than the set deceleration rate, the motor speed will follow the reference signal. - If the reference changes faster than the set deceleration rate, the motor speed will follow the deceleration rate. - If the deceleration time is set too short, the drive will automatically prolong the deceleration in order not to exceed drive operating limits. If a short deceleration time is needed for a high inertia application, the drive should be equipped with a brake resistor. Actual deceleration time depends on parameter *2204* RAMP SHAPE 1 setting.	5
	0.0…1800.0 s	Time	
2204	RAMP SHAPE 1	Selects the shape of the acceleration/deceleration ramp 1. The function is deactivated during emergency stop (*2109* EMER STOP SEL) and jogging (*1010* JOGGING SEL).	0
	0.0…1000.0 s	0.00 s: Linear ramp. Suitable for steady acceleration or deceleration and for slow ramps. 0.01…1000.00 s: S-curve ramp. S-curve ramps are ideal for conveyors carrying fragile loads, or other applications where a smooth transition is required when changing from one speed to another. The S-curve consists of symmetrical curves at both ends of the ramp and a linear part in between. A rule of thumb A suitable relation between the ramp shape time and the acceleration ramp time is 1/5. 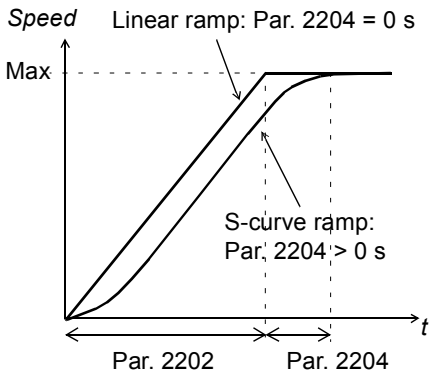 	

Parameters in the Long Parameter mode			
Index	**Name/Selection**	**Description**	**Def**
2205	ACCELER TIME 2	Defines the acceleration time 2 i.e. the time required for the speed to change from zero to the speed defined by parameter *2008* MAXIMUM FREQ. See parameter *2202* ACCELER TIME 1. Acceleration time 2 is used also as jogging acceleration time. See parameter *1010* JOGGING SEL.	60
	0.0…1800.0 s	Time	
2206	DECELER TIME 2	Defines the deceleration time 2 i.e. the time required for the speed to change from the value defined by parameter *2008* MAXIMUM FREQ to zero. See parameter *2203* DECELER TIME 1. Deceleration time 2 is used also as jogging deceleration time. See parameter *1010* JOGGING SEL.	60
	0.0…1800.0 s	Time	
2207	RAMP SHAPE 2	Selects the shape of the acceleration/deceleration ramp 2. The function is deactivated during emergency stop (*2109* EMER STOP SEL). Ramp shape 2 is used also as jogging ramp shape time. See parameter *1010* JOGGING SEL.	0
	0.0…1000.0 s	See parameter *2204* RAMP SHAPE 1.	
2208	EMER DEC TIME	Defines the time within the drive is stopped if an emergency stop is activated. See parameter *2109* EMER STOP SEL.	1
	0.0…1800.0 s	Time	
2209	RAMP INPUT 0	Defines the source for forcing the ramp input to zero.	0 = NOT SEL
	0 = NOT SEL	Not selected	
	1 = DI1	Digital input DI1.1 = ramp input is forced to zero. Ramp output will ramp to zero according to the used ramp time.	
	2 = DI2	See selection DI1.	
	3 = DI3	See selection DI1.	
	4 = DI4	See selection DI1.	
	5 = DI5	See selection DI1.	
	-1 = DI1(INV)	Inverted digital input DI1.0 = ramp input is forced to zero. Ramp output will ramp to zero according to the used ramp time.	
	-2 = DI2(INV)	See selection DI1(INV).	
	-3 = DI3(INV)	See selection DI1(INV).	
	-4 = DI4(INV)	See selection DI1(INV).	
	-5 = DI5(INV)	See selection DI1(INV).	

Parameters in the Long Parameter mode			
Index	**Name/Selection**	**Description**	**Def**
25 CRITICAL SPEEDS		Speed bands within which the drive is not allowed to operate. A Critical Speeds function is available for applications where it is necessary to avoid certain motor speeds or speed bands because of e.g. mechanical resonance problems. The user can define three critical speeds or speed bands.	
2501	CRIT SPEED SEL	Activates/deactivates the critical speeds function. The critical speed function avoids specific speed ranges. Example: A fan has vibrations in the range of 18 to 23 Hz and 46 to 52 Hz. To make the drive to jump over the vibration speed ranges: - Activate the critical speeds function. - Set the critical speed ranges as in the figure below. 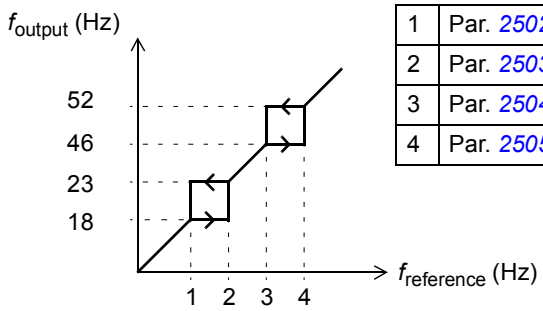 1 Par. *2502* = 18 Hz 2 Par. *2503* = 23 Hz 3 Par. *2504* = 46 Hz 4 Par. *2505* = 52 Hz	0 = OFF
	0 = OFF	Inactive	
	1 = ON	Active	
2502	CRIT SPEED 1 LO	Defines the minimum limit for critical speed/frequency range 1.	0
	0.0…500.0 Hz	Limit. The value cannot be above the maximum (parameter *2503* CRIT SPEED 1 HI).	
2503	CRIT SPEED 1 HI	Defines the maximum limit for critical speed/frequency range 1.	0
	0.0…500.0 Hz	Limit. The value cannot be below the minimum (parameter *2502* CRIT SPEED 1 LO).	
2504	CRIT SPEED 2 LO	See parameter *2502* CRIT SPEED 1 LO.	0
	0.0…500.0 Hz	See parameter *2502*.	
2505	CRIT SPEED 2 HI	See parameter *2503* CRIT SPEED 1 HI.	0
	0.0…500.0 Hz	See parameter *2503*.	
2506	CRIT SPEED 3 LO	See parameter *2502* CRIT SPEED 1 LO.	0
	0.0…500.0 Hz	See parameter *2502*.	
2507	CRIT SPEED 3 HI	See parameter *2503* CRIT SPEED 1 HI.	0
	0.0…500.0 Hz	See parameter *2503*.	
26 MOTOR CONTROL		Motor control variables	
2601	FLUX OPT ENABLE	Activates/deactivates the flux optimisation function. Flux optimisation reduces the total energy consumption and motor noise level when the drive operates below the nominal load. The total efficiency (motor and the drive) can be improved by 1% to 10%, depending on the load torque and speed. The disadvantage of this function is that the dynamic performance of the drive is weakened.	0 = OFF
	0 = OFF	Inactive	

Parameters in the Long Parameter mode			
Index	**Name/Selection**	**Description**	**Def**
	1 = ON	Active	
2603	IR COMP VOLT	Defines the output voltage boost at zero speed (IR compensation). The function is useful in applications with high break-away torque. To prevent overheating, set IR compensation voltage as low as possible. The figure below illustrates the IR compensation. 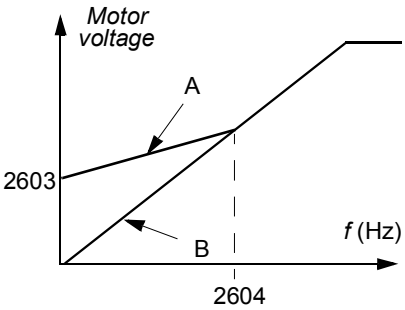 A = IR compensated B = No compensation Typical IR compensation values: P_N (kW) | 0.37 | 0.75 | 2.2 | 4.0 **200…240** V units IR comp (V) | 8.4 | 7.7 | 5.6 | 8.4 **380…480** V units IR comp (V) | 14 | 14 | 5.6 | 8.4	Type dependent
	0.0…100.0 V	Voltage boost	
2604	IR COMP FREQ	Defines the frequency at which the IR compensation is 0 V. See the figure for parameter *2603* IR COMP VOLT.	80
	0...100%	Value in percent of the motor frequency	
2605	U/F RATIO	Selects the voltage to frequency (U/f) ratio below the field weakening point.	1 = LINEAR
	1 = LINEAR	Linear ratio for constant torque applications	
	2 = SQUARED	Squared ratio for centrifugal pump and fan applications. With squared U/f ratio the noise level is lower for most operating frequencies.	
2606	SWITCHING FREQ	Defines the switching frequency of the drive. Higher switching frequency results in lower acoustic noise. See also parameter *2607* SWITCH FREQ CTRL and *Switching frequency derating* on page *114*.	4
	4 kHz	4 kHz	
	8 kHz	8 kHz	
	12 kHz	12 kHz	
	16 kHz	16 kHz	
2607	SWITCH FREQ CTRL	Activates the switching frequency control. When active, the selection of parameter *2606* SWITCHING FREQ is limited when the drive internal temperature increases. See the figure below. This function allows the highest possible switching frequency at a specific operation point. Higher switching frequency results in lower acoustic noise, but higher internal losses. 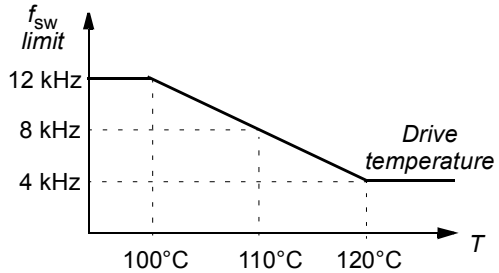 	1 = ON
	0 = OFF	Inactive	
	1 = ON	Active	

Parameters in the Long Parameter mode			
Index	**Name/Selection**	**Description**	**Def**
2608	SLIP COMP RATIO	Defines the slip gain for the motor slip compensation control. 100% means full slip compensation, 0% means no slip compensation. Other values can be used if a static speed error is detected despite of the full slip compensation. Example: 35 Hz constant speed reference is given to the drive. Despite of the full slip compensation (SLIP COMP RATIO = 100%), a manual tachometer measurement from the motor axis gives a speed value of 34 Hz. The static speed error is 35 Hz - 34 Hz = 1 Hz. To compensate the error, the slip gain should be increased.	0
	0...200%	Slip gain	
30 FAULT FUNCTIONS		Programmable protection functions	
3001	AI<MIN FUNCTION	Selects how the drive reacts when an analog input signal falls below the set minimum limit.	0 = NOT SEL
	0 = NOT SEL	Protection is inactive.	
	1 = FAULT	The drive trips on fault AI1 LOSS (code: F0007) and the motor coasts to stop. Fault limit is defined by parameter *3021* AI1 FAULT LIMIT.	
	2 = CONST SP 7	The drive generates alarm AI1 LOSS (code: A2006) and sets the speed to the value defined by parameter *1208* CONST SPEED 7. The alarm limit is defined by parameter *3021* AI1 FAULT LIMIT. **WARNING!** Make sure that it is safe to continue operation in case the analog input signal is lost.	
	3 = LAST SPEED	The drive generates alarm AI1 LOSS (code: A2006) and freezes the speed to the level the drive was operating at. The speed is determined by the average speed over the previous 10 seconds. The alarm limit is defined by parameter *3021* AI1 FAULT LIMIT. **WARNING!** Make sure that it is safe to continue operation in case the analog input signal is lost.	
3003	EXTERNAL FAULT 1	Selects an interface for an external fault 1 signal.	0 = NOT SEL
	0 = NOT SEL	Not selected	
	1 = DI1	External fault indication through digital input DI1. 1: Fault trip (EXT FAULT 1, code: F0014). Motor coasts to stop. 0: No external fault.	
	2 = DI2	See selection DI1.	
	3 = DI3	See selection DI1.	
	4 = DI4	See selection DI1.	
	5 = DI5	See selection DI1.	
	-1 = DI1(INV)	External fault indication through inverted digital input DI1. 0: Fault trip (EXT FAULT 1, code: F0014). Motor coasts to stop. 1: No external fault.	
	-2 = DI2(INV)	See selection DI1(INV).	
	-3 = DI3(INV)	See selection DI1(INV).	
	-4 = DI4(INV)	See selection DI1(INV).	
	-5 = DI5(INV)	See selection DI1(INV).	
3004	EXTERNAL FAULT 2	Selects an interface for an external fault 2 signal.	0 = NOT SEL
		See parameter *3003* EXTERNAL FAULT 1.	

Parameters in the Long Parameter mode			
Index	**Name/Selection**	**Description**	**Def**
3005	MOT THERM PROT	Selects how the drive reacts when motor overtemperature is detected. The drive calculates the temperature of the motor on the basis of the following assumptions: 1) The motor is in the ambient temperature of 30°C when power is applied to the drive. 2) Motor temperature is calculated using either the user-adjustable (see parameters *3006*...*3009*) or automatically calculated motor thermal time constant and motor load curve. The load curve should be adjusted in case the ambient temperature exceeds 30°C.	1 = FAULT
	0 = NOT SEL	Protection is inactive.	
	1 = FAULT	The drive trips on fault MOT OVERTEMP (code: F0009) when the temperature exceeds 110°C, and the motor coasts to a stop.	
	2 = ALARM	The drive generates alarm MOTOR TEMP (code: A2010) when the motor temperature exceeds 90°C.	
3006	MOT THERM TIME	Defines the thermal time constant for the motor thermal model, i.e. the time within the motor temperature has reached 63% of the nominal temperature with steady load. For thermal protection according to UL requirements for NEMA class motors, use the rule of thumb: Motor thermal time = 35 · t6. t6 (in seconds) is specified by the motor manufacturer as the time the motor can safely operate at six times its rated current. Thermal time for a Class 10 trip curve is 350 s, for a Class 20 trip curve 700 s, and for a Class 30 trip curve 1050 s. 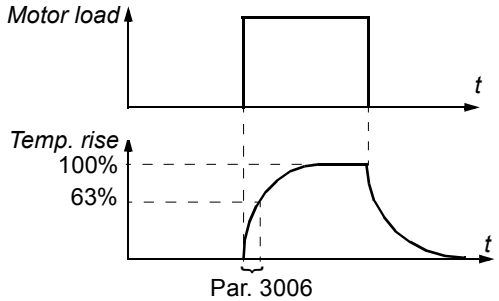 	500
	256…9999 s	Time constant	
3007	MOT LOAD CURVE	Defines the load curve together with parameters *3008* ZERO SPEED LOAD and *3009* BREAK POINT FREQ. If value is set to 100%, the maximum allowed load is equal to parameter *9906* MOTOR NOM CURR value. Load curve should be adjusted, if the ambient temperature differs from nominal temperature. 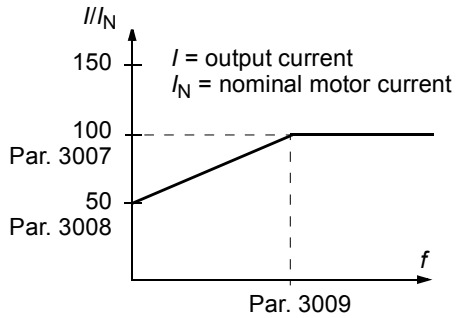 	100
	50.…150%	Allowed continuous motor load in percent of the nominal motor current	

Parameters in the Long Parameter mode			
Index	**Name/Selection**	**Description**	**Def**
3008	ZERO SPEED LOAD	Defines the load curve together with parameters *3007* MOT LOAD CURVE and *3009* BREAK POINT FREQ.	70
	25.…150%	Allowed continuous motor load at zero speed in percent of the nominal motor current	
3009	BREAK POINT FREQ	Defines the load curve together with parameters *3007* MOT LOAD CURVE and *3008* ZERO SPEED LOAD. Example: Thermal protection trip times when parameters *3006*…*3008* have default values. 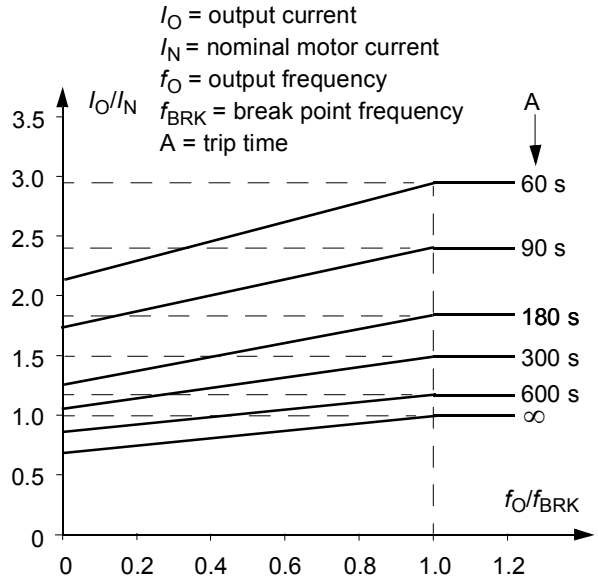 	35
	1…250 Hz	Drive output frequency at 100% load	
3010	STALL FUNCTION	Selects how the drive reacts to a motor stall condition. The protection wakes up if the drive has operated in a stall region (see the figure below) longer than the time set by parameter *3012* STALL TIME. 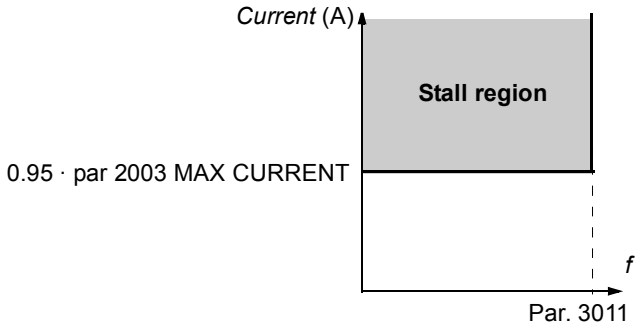 	0 = NOT SEL
	0 = NOT SEL	Protection is inactive.	
	1 = FAULT	The drive trips on fault MOTOR STALL (code: F0012) and the motor coast to a stop.	
	2 = ALARM	The drive generates alarm MOTOR STALL (code: A2012).	
3011	STALL FREQUENCY	Defines the frequency limit for the stall function. See parameter *3010* STALL FUNCTION.	20
	0.5…50.0 Hz	Frequency	

Parameters in the Long Parameter mode			
Index	**Name/Selection**	**Description**	**Def**
3012	STALL TIME	Defines the time for the stall function. See parameter *3010* STALL FUNCTION.	20
	10…400 s	Time	
3013	UNDERLOAD FUNC	Selects how the drive reacts to underload. The protection wakes up if - the motor torque falls below the curve selected by parameter *3015* UNDERLOAD CURVE, - output frequency is higher than 10% of the nominal motor frequency and - the above conditions have been valid longer than the time set by parameter *3014* UNDERLOAD TIME.	0 = NOT SEL
	0 = NOT SEL	Protection is inactive.	
	1 = FAULT	The drive trips on fault UNDERLOAD (code: F0017) and the motor coasts to a stop.	
	2 = ALARM	The drive generates alarm UNDERLOAD (code: A2011).	
3014	UNDERLOAD TIME	Defines the time limit for the underload function. See parameter *3013* UNDERLOAD FUNC.	20
	10…400 s	Time limit	
3015	UNDERLOAD CURVE	Selects the load curve for the underload function. See parameter *3013* UNDERLOAD FUNC. T_M = nominal torque of the motor f_N = nominal frequency of the motor (par. *9907*) 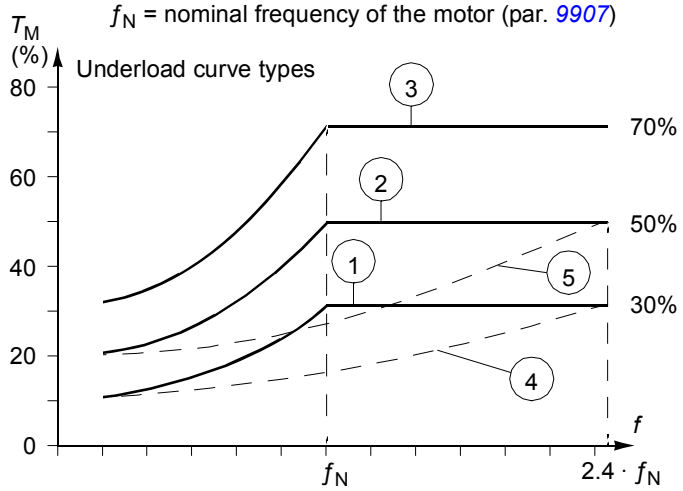 	1
	1…5	Number of the load curve	
3016	SUPPLY PHASE	Selects how the drive reacts to supply phase loss, i.e. when DC voltage ripple is excessive.	0 = FAULT
	0 = FAULT	The drive trips on fault INPUT PHASE LOSS (code: F0022) and the motor coasts to a stop when the DC voltage ripple exceeds 14% of the nominal DC voltage.	
	1 = LIMIT/ALARM	Drive output current is limited and alarm INPUT PHASE LOSS (code: A2026) is generated when the DC voltage ripple exceeds 14% of the nominal DC voltage. There is a 10 s delay between the activation of the alarm and the output current limitation. The current is limited until the ripple drops under the minimum limit, 0.3 · I_{hd}.	

Parameters in the Long Parameter mode			
Index	**Name/Selection**	**Description**	**Def**
	2 = ALARM	The drive generates alarm INPUT PHASE LOSS (code: A2026) when the DC ripple exceeds 14% of the nominal DC voltage.	
3017	EARTH FAULT	Selects how the drive reacts when an earth (ground) fault is detected in the motor or the motor cable. The protection is active only during start. An earth fault in the input power line does not activate the protection **Note:** Changing this parameter setting is not recommended.	1 = ENABLE
	0 = DISABLE	No action	
	1 = ENABLE	The drive trips on fault EARTH FAULT (code: F0016).	
3021	AI1 FAULT LIMIT	Defines the fault or alarm level for analog input AI1. If parameter *3001* AI<MIN FUNCTION is set to FAULT, CONST SP 7 or LAST SPEED, the drive generates alarm or fault AI1 LOSS (code: A2006 or F0007), when the analog input signal falls below the set level. Do not set this limit below the level defined by parameter *1301* MINIMUM AI1.	0
	0.0…100.0%	Value in percent of the full signal range	
3023	WIRING FAULT	Selects how the drive reacts when incorrect input power and motor cable connection is detected (i.e. the input power cable is connected to the motor connection of the drive). **Note:** Changing this parameter setting is not recommended in normal use. The protection is to be disabled only with corner-grounded delta power systems and very long cables.	1 = ENABLE
	0 = DISABLE	No action	
	1 = ENABLE	The drive trips on fault OUTP WIRING (code F0035).	
31 AUTOMATIC RESET		Automatic fault reset. Automatic resets are possible only for certain fault types and when the automatic reset function is activated for that fault type.	
3101	NR OF TRIALS	Defines the number of automatic fault resets the drive performs within the time defined by parameter *3102* TRIAL TIME. If the number of automatic resets exceeds the set number (within the trial time), the drive prevents additional automatic resets and remains stopped. The drive must be reset from control panel or from a source selected by parameter *1604* FAULT RESET SEL. Example: Three faults have occurred during the trial time defined by parameter 3102 TRIAL TIME. Last fault is reset only if the number defined by parameter 3101 NR OF TRIALS is 3 or more. 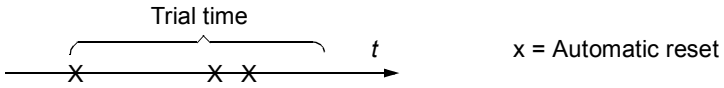	0
	0…5	Number of the automatic resets	
3102	TRIAL TIME	Defines the time for the automatic fault reset function. See parameter *3101* NR OF TRIALS.	30
	1.0…600.0 s	Time	
3103	DELAY TIME	Defines the time that the drive will wait after a fault before attempting an automatic reset. See parameter *3101* NR OF TRIALS. If delay time is set to zero, the drive resets immediately.	0
	0.0…120.0 s	Time	
3104	AR OVERCURRENT	Activates/deactivates the automatic reset for the overcurrent fault. Automatically resets the fault (OVERCURRENT, code: F0001) after the delay set by parameter *3103* DELAY TIME.	0 = DISABLE

Parameters in the Long Parameter mode			
Index	**Name/Selection**	**Description**	**Def**
	0 = DISABLE	Inactive	
	1 = ENABLE	Active	
3105	AR OVERVOLTAGE	Activates/deactivates the automatic reset for the intermediate link overvoltage fault. Automatically resets the fault (DC OVERVOLT, code: F0002) after the delay set by parameter *3103* DELAY TIME.	0 = DISABLE
	0 = DISABLE	Inactive	
	1 = ENABLE	Active	
3106	AR UNDERVOLTAGE	Activates/deactivates the automatic reset for the intermediate link undervoltage fault. Automatically resets the fault (DC UNDERVOLTAGE, code: F0006) after the delay set by parameter *3103* DELAY TIME.	0 = DISABLE
	0 = DISABLE	Inactive	
	1 = ENABLE	Active	
3107	AR AI<MIN	Activates/deactivates the automatic reset for fault AI1 LOSS, code: F0007 (analog input signal under the allowed minimum level). Automatically resets the fault after the delay set by parameter *3103* DELAY TIME.	0 = DISABLE
	0 = DISABLE	Inactive	
	1 = ENABLE	Active **WARNING!** The drive may restart even after a long stop if the analog input signal is restored. Ensure that the use of this feature will not cause danger.	
3108	AR EXTERNAL FLT	Activates/deactivates the automatic reset for the EXTERNAL FAULT 1/2 (code: F0014/0015). Automatically resets the fault after the delay set by parameter *3103* DELAY TIME.	0 = DISABLE
	0 = DISABLE	Inactive	
	1 = ENABLE	Active	

Parameters in the Long Parameter mode			
Index	**Name/Selection**	**Description**	**Def**
32 SUPERVISION		Signal supervision. The drive monitors whether certain user selectable variables are within the user-defined limits. The user may set limits for speed, current etc. Supervision status can be monitored with relay output. See parameter group *14 RELAY OUTPUTS*.	
3201	SUPERV 1 PARAM	Selects the first supervised signal. Supervision limits are defined by parameters *3202* SUPERV 1 LIM LO and *3203* SUPERV 1 LIM HI. Example 1: If *3202* SUPERV 1 LIM LO ≤ *3203* SUPERV 1 LIM HI **Case A** = *1401* RELAY OUTPUT 1 value is set to SUPRV 1 OVER. Relay energises when value of the signal selected with *3201* SUPERV 1 PARAM exceeds the supervision limit defined by *3203* SUPERV 1 LIM HI. The relay remains active until the supervised value drops below the low limit defined by *3202* SUPERV 1 LIM LO. **Case B** = *1401* RELAY OUTPUT 1 value is set to SUPRV 1 UNDER. Relay energises when value of the signal selected with *3201* SUPERV 1 PARAM drops below the supervision limit defined by *3202* SUPERV 1 LIM LO. The relay remains active until the supervised value rises above the high limit defined by *3203* SUPERV 1 LIM HI. 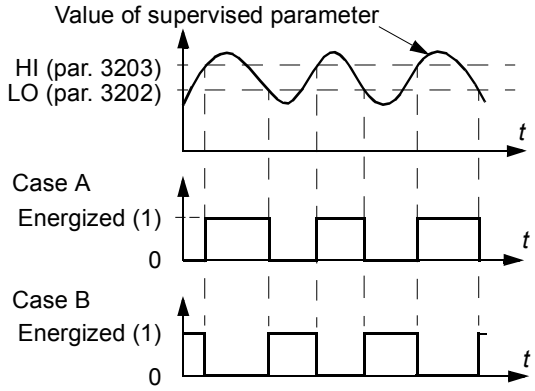 Example 2: If *3202* SUPERV 1 LIM LO > *3203* SUPERV 1 LIM HI The lower limit *3203* SUPERV 1 LIM HI remains active until the supervised signal exceeds the higher limit *3202* SUPERV 1 LIM LO, making it the active limit. The new limit remains active until the supervised signal drops below the lower limit *3203* SUPERV 1 LIM HI, making it the active limit. **Case A** = *1401* RELAY OUTPUT 1 value is set to SUPRV 1 OVER. Relay is energized whenever the supervised signal exceeds the active limit. **Case B** = *1401* RELAY OUTPUT 1 value is set to SUPRV 1 UNDER. Relay is de-energized whenever the supervised signal drops below the active limit. 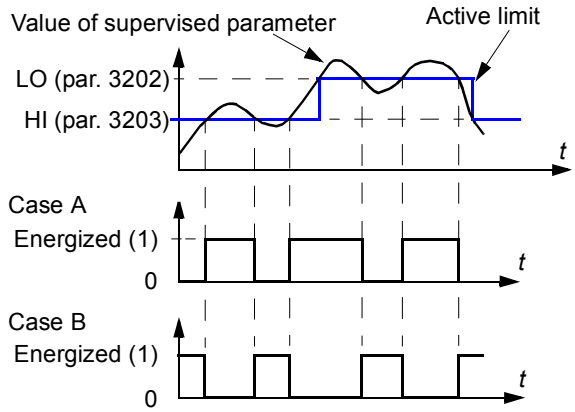 	103

Parameters in the Long Parameter mode			
Index	**Name/Selection**	**Description**	**Def**
	0, x…x	Parameter index in group *01 OPERATING DATA*. E.g. 102 = *0101* SPEED. 0 = not selected.	
3202	SUPERV 1 LIM LO	Defines the low limit for the first supervised signal selected by parameter *3201* SUPERV 1 PARAM. Supervision wakes up if the value is below the limit.	-
	x…x	Setting range depends on parameter *3201* setting.	-
3203	SUPERV 1 LIM HI	Defines the high limit for the first supervised signal selected by parameter *3201* SUPERV 1 PARAM. Supervision wakes up if the value is above the limit.	-
	x…x	Setting range depends on parameter *3201* setting.	-
3204	SUPERV 2 PARAM	Selects the second supervised signal. Supervision limits are defined by parameters *3205* SUPERV 2 LIM LO and *3206* SUPERV 2 LIM HI. See parameter *3201* SUPERV 1 PARAM.	104
	x…x	Parameter index in group *01 OPERATING DATA*. E.g. 102 = *0101* SPEED.	
3205	SUPERV 2 LIM LO	Defines the low limit for the second supervised signal selected by parameter *3204* SUPERV 2 PARAM. Supervision wakes up if the value is below the limit.	-
	x…x	Setting range depends on parameter *3204* setting.	-
3206	SUPERV 2 LIM HI	Defines the high limit for the second supervised signal selected by parameter *3204* SUPERV 2 PARAM. Supervision wakes up if the value is above the limit.	-
	x…x	Setting range depends on parameter *3204* setting.	-
3207	SUPERV 3 PARAM	Selects the third supervised signal. Supervision limits are defined by parameters *3208* SUPERV 3 LIM LO and *3209* SUPERV 3 LIM HI. See parameter *3201* SUPERV 1 PARAM.	105
	x…x	Parameter index in group *01 OPERATING DATA*. E.g. 102 = *0101* SPEED.	
3208	SUPERV 3 LIM LO	Defines the low limit for the third supervised signal selected by parameter *3207* SUPERV 3 PARAM. Supervision wakes up if the value is below the limit.	-
	x…x	Setting range depends on parameter *3207* setting.	-
3209	SUPERV 3 LIM HI	Defines the high limit for the third supervised signal selected by parameter *3207* SUPERV 3 PARAM. Supervision wakes up if the value is above the limit.	-
	x…x	Setting range depends on parameter *3207* setting.	-
33 INFORMATION		Firmware package version, test date etc.	
3301	FIRMWARE	Displays the version of the firmware package.	
	0.0000…FFFF (hex)	E.g. 1.30b	
3302	LP VERSION	Displays the version of the loading package.	Type dependent
	0x2001…0x20FF (hex)	0x2021 = ACS150-0x (Eur GML)	
3303	TEST DATE	Displays the test date.	00.00
		Date value in format YY.WW (year, week)	

Parameters in the Long Parameter mode			
Index	**Name/Selection**	**Description**	**Def**
3304	DRIVE RATING	Displays the drive current and voltage ratings.	0x0000
	0x0000…0xFFFF (hex)	Value in format XXXY: XXX = Nominal current of the drive in Amperes. An “A” indicates decimal point. For example if XXX is 8A8, nominal current is 8.8 A. Y = Nominal voltage of the drive: 2 = 200…240 V 4 = 380…480 V	
34 PANEL DISPLAY		Selection of actual signals to be displayed on the panel	
3401	SIGNAL1 PARAM	Selects the first signal to be displayed on the control panel in display mode. 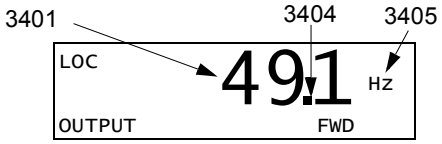 	103
	0, 102…162	Parameter index in group *01 OPERATING DATA*. E.g. 102 = *0101* SPEED. If value is set to 0, no signal is selected. If parameter *3401* SIGNAL1 PARAM, *3408* SIGNAL2 PARAM and *3415* SIGNAL3 PARAM values are all set to 0, n.A. is displayed.	
3402	SIGNAL1 MIN	Defines the minimum value for the signal selected by parameter *3401* SIGNAL1 PARAM. 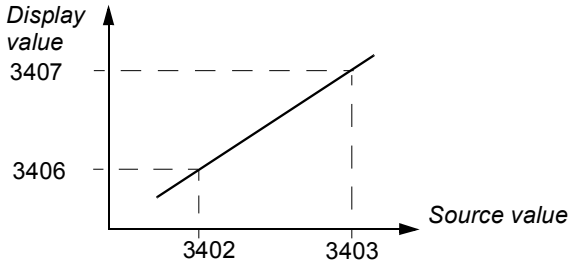 **Note:** Parameter is not effective if parameter *3404* OUTPUT1 DSP FORM setting is DIRECT.	-
	x…x	Setting range depends on parameter *3401* setting.	-
3403	SIGNAL1 MAX	Defines the maximum value for the signal selected by parameter *3401* SIGNAL1 PARAM. See the figure for parameter *3402* SIGNAL1 MIN. **Note:** Parameter is not effective if parameter *3404* OUTPUT1 DSP FORM setting is DIRECT.	-
	x…x	Setting range depends on parameter *3401* setting.	-

Parameters in the Long Parameter mode			
Index	**Name/Selection**	**Description**	**Def**
3404	OUTPUT1 DSP FORM	Defines the format for the displayed signal selected by parameter *3401* SIGNAL1 PARAM.	9 = DIRECT
	0 = +/-0	Signed/Unsigned value. Unit is selected by parameter *3405* OUTPUT 1 UNIT. Example PI (3.14159):	
	1 = +/-0.0		
	2 = +/-0.00		
	3 = +/-0.000		
	4 = +0		
	5 = +0.0		
	6 = +0.00		
	7 = +0.000		
	8 = BAR METER	Bar graph is not available for this application.	
	9 = DIRECT	Direct value. Decimal point location and units of measure are identical to the source signal. **Note:** Parameters *3402*, *3403* and *3405*...*3407* are not effective.	
3405	OUTPUT1 UNIT	Selects the unit for the displayed signal selected by parameter *3401* SIGNAL1 PARAM. **Note:** Parameter is not effective if parameter *3404* OUTPUT1 DSP FORM setting is DIRECT. **Note:** Unit selection does not convert values.	-
	0 = NO UNIT	No unit selected	
	1 = A	Ampere	
	2 = V	Volt	
	3 = Hz	Hertz	
	4 = %	Percent	
	5 = s	Second	
	6 = h	Hour	
	7 = rpm	Revolutions per minute	
	8 = kh	Kilohour	
	9 = °C	Celsius	
	11 = mA	Milliampere	
	12 = mV	Millivolt	
3406	OUTPUT1 MIN	Sets the minimum display value for the signal selected by parameter *3401* SIGNAL1 PARAM. See parameter *3402* SIGNAL1 MIN. **Note:** Parameter is not effective if parameter *3404* OUTPUT1 DSP FORM setting is DIRECT.	-
	x…x	Setting range depends on parameter *3401* setting.	-
3407	OUTPUT1 MAX	Sets the maximum display value for the signal selected by parameter *3401* SIGNAL1 PARAM. See parameter *3402* SIGNAL1 MIN. **Note:** Parameter is not effective if parameter *3404* OUTPUT1 DSP FORM setting is DIRECT.	-
	x…x	Setting range depends on parameter *3401* setting.	-

3404 value	Display	Range
+/-0	± 3	-32768...+32767
+/-0.0	± 3.1	
+/-0.00	± 3.14	
+/-0.000	± 3.142	
+0	3	0....65535
+0.0	3.1	
+0.00	3.14	
+0.000	3.142	

Parameters in the Long Parameter mode			
Index	**Name/Selection**	**Description**	**Def**
3408	SIGNAL2 PARAM	Selects the second signal to be displayed on the control panel in display mode. See parameter *3401* SIGNAL1 PARAM.	104
	0, 102…162	Parameter index in group *01 OPERATING DATA*. E.g. 102 = *0101* SPEED. If value is set to 0, no signal is selected. If parameter *3401* SIGNAL1 PARAM, *3408* SIGNAL2 PARAM and *3415* SIGNAL3 PARAM values are all set to 0, n.A. is displayed.	
3409	SIGNAL2 MIN	Defines the minimum value for the signal selected by parameter *3408* SIGNAL2 PARAM. See parameter *3402* SIGNAL1 MIN.	-
	x…x	Setting range depends on parameter *3408* setting.	-
3410	SIGNAL2 MAX	Defines the maximum value for the signal selected by parameter *3408* SIGNAL2 PARAM. See parameter *3402* SIGNAL1 MIN.	-
	x…x	Setting range depends on parameter *3408* setting.	-
3411	OUTPUT2 DSP FORM	Defines the format for the displayed signal selected by parameter *3408* SIGNAL2 PARAM.	9 = DIRECT
		See parameter *3404* OUTPUT1 DSP FORM.	-
3412	OUTPUT2 UNIT	Selects the unit for the displayed signal selected by parameter *3408* SIGNAL2 PARAM.	-
		See parameter *3405* OUTPUT1 UNIT.	-
3413	OUTPUT2 MIN	Sets the minimum display value for the signal selected by parameter *3408* SIGNAL2 PARAM. See parameter *3402* SIGNAL1 MIN.	-
	x…x	Setting range depends on parameter *3408* setting.	-
3414	OUTPUT2 MAX	Sets the maximum display value for the signal selected by parameter *3408* SIGNAL2 PARAM. See parameter *3402* SIGNAL1 MIN.	-
	x…x	Setting range depends on parameter *3408* setting.	-
3415	SIGNAL3 PARAM	Selects the third signal to be displayed on the control panel in display mode. See parameter *3401* SIGNAL1 PARAM.	105
	0, 102…162	Parameter index in group *01 OPERATING DATA*. E.g. 102 = *0101* SPEED. If value is set to 0, no signal is selected. If parameter *3401* SIGNAL1 PARAM, *3408* SIGNAL2 PARAM and *3415* SIGNAL3 PARAM values are all set to 0, n.A. is displayed.	
3416	SIGNAL3 MIN	Defines the minimum value for the signal selected by parameter *3415*. See parameter *3402* SIGNAL1 MIN.	-
	x…x	Setting range depends on parameter *3415* SIGNAL 3 PARAM setting.	-
3417	SIGNAL3 MAX	Defines the maximum value for the signal selected by parameter *3415* SIGNAL3 PARAM. See parameter *3402* SIGNAL1 MIN.	-
	x…x	Setting range depends on parameter *3415* SIGNAL3 PARAM setting.	-
3418	OUTPUT3 DSP FORM	Defines the format for the displayed signal selected by parameter *3415* SIGNAL3 PARAM.	9 = DIRECT
		See parameter *3404* OUTPUT1 DSP FORM.	-
3419	OUTPUT3 UNIT	Selects the unit for the displayed signal selected by parameter *3415* SIGNAL3 PARAM.	-
		See parameter *3405* OUTPUT1 UNIT.	-
3420	OUTPUT3 MIN	Sets the minimum display value for the signal selected by parameter *3415* SIGNAL3 PARAM. See parameter *3402* SIGNAL1 MIN.	-
	x…x	Setting range depends on parameter *3415* SIGNAL3 PARAM setting.	-

Parameters in the Long Parameter mode			
Index	**Name/Selection**	**Description**	**Def**
3421	OUTPUT3 MAX	Sets the maximum display value for the signal selected by parameter *3415* SIGNAL3 PARAM. See parameter *3402* SIGNAL1 MIN.	-
	x…x	Setting range depends on parameter *3415* setting.	-
99 START-UP DATA		Application macro. Definition of motor set-up data.	
9902	APPLIC MACRO	Selects the application macro or activates FlashDrop parameter values. See chapter *Application macros*.	1 = ABB STANDARD
	1 = ABB STANDARD	Standard macro for constant speed applications	
	2 = 3-WIRE	3-wire macro for constant speed applications	
	3 = ALTERNATE	Alternate macro for start forward and start reverse applications	
	4 = MOTOR POT	Motor potentiometer macro for digital signal speed control applications	
	5 = HAND/AUTO	Hand/Auto macro to be used when two control devices are connected to the drive: - Device 1 communicates through the interface defined by external control location EXT1. - Device 2 communicates through the interface defined by external control location EXT2. EXT1 or EXT2 is active at a time. Switching between EXT1/2 through digital input.	
	31 = LOAD FD SET	FlashDrop parameter values as defined by the FlashDrop file. Parameter view is selected by parameter *1611* PARAMETER VIEW. FlashDrop is an optional device for fast copying of parameters to unpowered drives. FlashDrop allows easy customisation of the parameter list, e.g. selected parameters can be hidden. For more information, see *MFDT-01 FlashDrop User's Manual* [3AFE68591074 (English)].	
9905	MOTOR NOM VOLT	Defines the nominal motor voltage. Must be equal to the value on the motor rating plate. The drive cannot supply the motor with a voltage greater than the input power voltage. 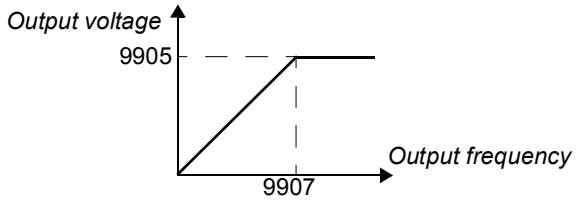 **WARNING!** Never connect a motor to a drive which is connected to power line with voltage level higher than the rated motor voltage.	200 (US: 230) 400 (US: 460)
	100...300 V (200 V / US: 230 V units) 230...690 V (400 V / US: 460 V units)	Voltage. **Note:** The stress on the motor insulations is always dependent on the drive supply voltage. This also applies to the case where the motor voltage rating is lower than the rating of the drive and the supply of the drive.	
9906	MOTOR NOM CURR	Defines the nominal motor current. Must be equal to the value on the motor rating plate.	I_{2N}
	0.2…2.0 · I_{2N}	Current	
9907	MOTOR NOM FREQ	Defines the nominal motor frequency, i.e the frequency at which the output voltage equals the motor nominal voltage: Field weakening point = Nom. frequency · Supply voltage / Mot nom. voltage	Eur: 50 / US: 60
	10.0…500.0 Hz	Frequency	

Parameters in the Long Parameter mode			
Index	**Name/Selection**	**Description**	**Def**
9908	MOTOR NOM SPEED	Defines the nominal motor speed. Must be equal to the value on the motor rating plate.	Type dependent
	50…30000 rpm	Speed	
9909	MOTOR NOM POWER	Defines the nominal motor power. Must equal the value on the motor rating plate.	P_N
	0.2…3.0 · P_N kW/hp	Power	

Fault tracing

What this chapter contains

The chapter lists all alarm and fault messages including the possible cause and corrective actions.

Safety

WARNING! Only qualified electricians are allowed to maintain the drive. Read the safety instructions in chapter *Safety* on the first pages before you work on the drive.

Alarm and fault indications

An alarm or fault message on the panel display indicates abnormal drive status. Using the information given in this chapter most alarm and fault causes can be identified and corrected. If not, contact an ABB representative.

How to reset

The drive can be reset either by pressing the keypad key on the control panel, through digital input, or by switching the supply voltage off for a while. When the fault has been removed, the motor can be restarted.

Fault history

When a fault is detected, it is stored in the fault history. The latest faults are stored together with a time stamp.

Parameters *0401* LAST FAULT, *0412* PREVIOUS FAULT 1 and *0413* PREVIOUS FAULT 2 store the most recent faults. Parameters *0404*...*0409* show drive operation data at the time the latest fault occurred.

Alarm messages generated by the drive

CODE	ALARM	CAUSE	WHAT TO DO
A2001	OVERCURRENT (programmable fault function *1610*)	Output current limit controller is active.	Check motor load. Check acceleration time (*2202* and *2205*). Check motor and motor cable (including phasing). Check ambient conditions. Load capacity decreases if installation site ambient temperature exceeds 40°C. See section *Derating* on page *114*.
A2002	OVERVOLTAGE (programmable fault function *1610*)	DC overvoltage controller is active.	Check deceleration time (*2203* and *2206*). Check input power line for static or transient overvoltage.
A2003	UNDERVOLTAGE (programmable fault function *1610*)	DC undervoltage controller is active.	Check input power supply.
A2004	DIRLOCK	Change of direction is not allowed.	Check parameter *1003* DIRECTION settings.
A2006	AI1 LOSS (programmable fault function *3001*, *3021*)	Analog input AI1 signal has fallen below limit defined by parameter *3021* AI1 FAULT LIMIT.	Check fault function parameter settings. Check for proper analog control signal levels. Check connections.
A2009	DEVICE OVERTEMP	Drive IGBT temperature is excessive. Alarm limit is 120°C.	Check ambient conditions. See also section *Derating* on page *114*. Check air flow and fan operation. Check motor power against unit power.
A2010	MOTOR TEMP (programmable fault function *3005*...*3009*)	Motor temperature is too high (or appears to be too high) due to excessive load, insufficient motor power, inadequate cooling or incorrect start-up data.	Check motor ratings, load and cooling. Check start-up data. Check fault function parameter settings. Let motor cool down. Ensure proper motor cooling: Check cooling fan, clean cooling surfaces, etc.
A2011	UNDERLOAD (programmable fault function *3013*...*3015*)	Motor load is too low due to e.g. release mechanism in driven equipment.	Check for problem in driven equipment. Check fault function parameter settings. Check motor power against unit power.
A2012	MOTOR STALL (programmable fault function *3010*...*3012*)	Motor is operating in stall region due to e.g. excessive load or insufficient motor power.	Check motor load and drive ratings. Check fault function parameter settings.
A2013	AUTORESET	Automatic reset alarm	Check parameter group *31 AUTOMATIC RESET* settings.
A2017	OFF BUTTON	Drive stop command has been given from control panel when local control lock is active.	Disable local control mode lock by parameter *1606* LOCAL LOCK and retry.
A2023	EMERGENCY STOP	Drive has received emergency stop command and ramps to stop according to ramp time defined by parameter *2208* EMER DEC TIME.	Check that it is safe to continue operation. Return emergency stop push button to normal position.

CODE	ALARM	CAUSE	WHAT TO DO
A2026	INPUT PHASE LOSS (programmable fault function *3016*)	Intermediate circuit DC voltage is oscillating due to missing input power line phase or blown fuse. Alarm is generated when DC voltage ripple exceeds 14% of nominal DC voltage.	Check input power line fuses. Check for input power supply imbalance. Check fault function parameter setting.

CODE	CAUSE	WHAT TO DO
A5011	Drive is controlled from another source.	Change drive control to local control mode.
A5012	Direction of rotation is locked.	Enable change of direction. See parameter *1003* DIRECTION.
A5013	Panel control is disabled because start inhibit is active.	Deactivate start inhibit and retry. See parameter *2108* START INHIBIT.
A5014	Panel control is disabled because of drive fault.	Reset drive fault and retry.
A5015	Panel control is disabled because local control mode lock is active.	Deactivate local control mode lock and retry. See parameter *1606* LOCAL LOCK.
A5019	Writing non-zero parameter value is prohibited.	Only parameter reset is allowed.
A5022	Parameter is write protected.	Parameter value is read-only and cannot be changed.
A5023	Parameter change is not allowed, when drive is running.	Stop drive and change parameter value.
A5024	Drive is executing task.	Wait until task is completed.
A5026	Value is at or below minimum limit.	Contact your local ABB representative.
A5027	Value is at or above maximum limit.	Contact your local ABB representative.
A5028	Invalid value	Contact your local ABB representative.
A5029	Memory is not ready.	Retry.
A5030	Invalid request	Contact your local ABB representative.
A5031	Drive is not ready for operation, e.g due to low DC voltage.	Check input power supply.
A5032	Parameter error	Contact your local ABB representative.

Fault messages generated by the drive

CODE	FAULT	CAUSE	WHAT TO DO
F0001	OVERCURRENT	Output current has exceeded trip level. Overcurrent trip limit for drive is 325% of drive nominal current.	Check motor load. Check acceleration time (*2202* and *2205*). Check motor and motor cable (including phasing). Check ambient conditions. Load capacity decreases if installation site ambient temperature exceeds 40°C. See section *Derating* on page *114*.
F0002	DC OVERVOLT	Excessive intermediate circuit DC voltage. DC overvoltage trip limit is 420 V for 200 V drives and 840 V for 400 V drives.	Check that overvoltage controller is on (parameter *2005* OVERVOLT CTRL). Check brake chopper and resistor (if used). DC overvoltage control must be deactivated when brake chopper and resistor are used. Check deceleration time (*2203* and *2206*). Check input power line for static or transient overvoltage. Retrofit frequency converter with brake chopper and brake resistor.
F0003	DEV OVERTEMP	Drive IGBT temperature is excessive. Fault trip limit is 135°C.	Check ambient conditions. See also section *Derating* on page *114*. Check air flow and fan operation. Check motor power against unit power.
F0004	SHORT CIRC	Short circuit in motor cable(s) or motor	Check motor and motor cable.
F0006	DC UNDERVOLT	Intermediate circuit DC voltage is not sufficient due to missing input power line phase, blown fuse, rectifier bridge internal fault or too low input power.	Check that undervoltage controller is on (parameter *2006* UNDERVOLT CTRL). Check input power supply and fuses.
F0007	AI1 LOSS (programmable fault function *3001*, *3021*)	Analog input AI1 signal has fallen below limit defined by parameter *3021* AI1 FAULT LIMIT.	Check fault function parameter settings. Check for proper analog control signal levels. Check connections.
F0009	MOT OVERTEMP (programmable fault function *3005*...*3009*)	Motor temperature is too high (or appears to be too high) due to excessive load, insufficient motor power, inadequate cooling or incorrect start-up data.	Check motor ratings, load and cooling. Check start-up data. Check fault function parameter settings. Let motor cool down. Ensure proper motor cooling: Check cooling fan, clean cooling surfaces, etc.
F0012	MOTOR STALL (programmable fault function *3010*…*3012*)	Motor is operating in stall region due to e.g. excessive load or insufficient motor power.	Check motor load and drive ratings. Check fault function parameter settings.
F0014	EXT FAULT 1 (programmable fault function *3003*)	External fault 1	Check external devices for faults. Check fault function parameter setting.
F0015	EXT FAULT 2 (programmable fault function *3004*)	External fault 2	Check external devices for faults. Check fault function parameter setting.

CODE	FAULT	CAUSE	WHAT TO DO
F0016	EARTH FAULT (programmable fault function *3017*)	Drive has detected earth (ground) fault in motor or motor cable.	Check motor. Check fault function parameter setting. Check motor cable. Motor cable length must not exceed maximum specifications. See section *Motor connection* on page *119*.
F0017	UNDERLOAD (programmable fault function *3013*...*3015*)	Motor load is too low due to e.g. release mechanism in driven equipment.	Check for problem in driven equipment. Check fault function parameter settings. Check motor power against unit power.
F0018	THERM FAIL	Drive internal fault. Thermistor used for drive internal temperature measurement is open or short-circuited.	Contact your local ABB representative.
F0021	CURR MEAS	Drive internal fault. Current measurement is out of range.	Contact your local ABB representative.
F0022	INPUT PHASE LOSS (programmable fault function *3016*)	Intermediate circuit DC voltage is oscillating due to missing input power line phase or blown fuse. Fault trip occurs when DC voltage ripple exceeds 14% of nominal DC voltage.	Check input power line fuses. Check for input power supply imbalance. Check fault function parameter setting.
F0026	DRIVE ID	Internal drive ID fault	Contact your local ABB representative.
F0027	CONFIG FILE	Internal configuration file error	Contact your local ABB representative.
F0035	OUTP WIRING (programmable fault function *3023*)	Incorrect input power and motor cable connection (i.e. input power cable is connected to drive motor connection).	Check input power connections. Check fault function parameter setting.
F0036	INCOMPATIBLE SW	Loaded software is not compatible.	Contact your local ABB representative.
F0101	SERF CORRUPT	Corrupted Serial Flash chip file system	Contact your local ABB representative.
F0103	SERF MACRO	Active macro file missing from Serial Flash chip	Contact your local ABB representative.
F0201	DSP T1 OVERLOAD	System error	Contact your local ABB representative.
F0202	DSP T2 OVERLOAD		
F0203	DSP T3 OVERLOAD		
F0204	DSP STACK ERROR		
F0206	MMIO ID ERROR	Internal I/O Control board (MMIO) fault	Contact your local ABB representative.
F1000	PAR HZRPM	Incorrect speed/frequency limit parameter setting	Check parameter settings. Following must apply: *2007* < *2008*, *2007*/*9907* and *2008*/*9907* are within range.
F1003	PAR AI SCALE	Incorrect analog input AI signal scaling	Check parameter group *13 ANALOG INPUTS* settings. Following must apply: *1301* < *1302*.

Maintenance

What this chapter contains

The chapter contains preventive maintenance instructions.

Safety

WARNING! Read the instructions in chapter *Safety* on the first pages of this manual before performing any maintenance on the equipment. Ignoring the safety instructions can cause injury or death.

Maintenance intervals

If installed in an appropriate environment, the drive requires very little maintenance. The table lists the routine maintenance intervals recommended by ABB.

Maintenance	Interval	Instruction
Reforming of capacitors	Every year when stored	See *Capacitors* on page *112*.
Visual inspection	Every year	Check dustiness, corrosion, temperature and fan operation.
Cooling fan replacement (frame sizes R1…R2)	Every three years	See *Fan* on page *111*.
Tightness of input power cable, motor cable and control cable terminals	Every six years	Check that tightening torque values given in chapter *Technical data* are met.

Fan

The drive's cooling fan has a life span of minimum 25 000 operating hours. The actual life span depends on the drive usage and ambient temperature.

Fan failure can be predicted by the increasing noise from the fan bearings. If the drive is operated in a critical part of a process, fan replacement is recommended once these symptoms start appearing. Replacement fans are available from ABB. Do not use other than ABB specified spare parts.

Fan replacement (R1 and R2)

Only frame sizes R1 and R2 include a fan; frame size R0 has natural cooling.

1. Stop the drive and disconnect it from the AC power source.
2. Remove the hood if the drive has the NEMA 1 option.
3. Lever the fan holder off the drive frame with e.g. a screwdriver and lift the hinged fan holder slightly upward from its front edge.
4. Free the fan cable from the clip.
5. Disconnect the fan cable.
6. Remove the fan holder from the hinges.
7. Install the new fan holder including the fan in reverse order.
8. Restore power.

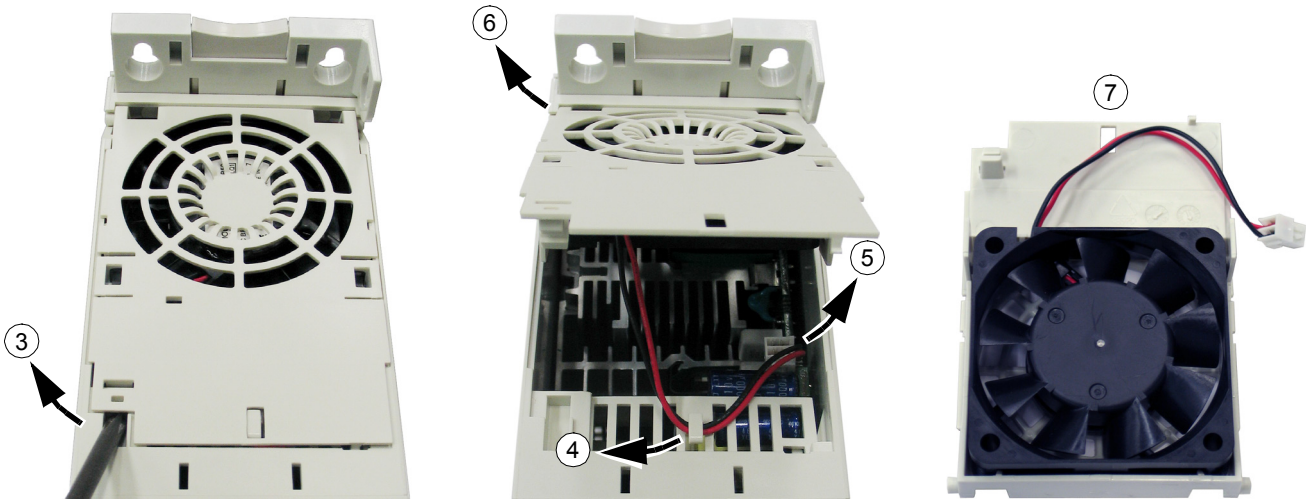

Capacitors

Reforming

The capacitors must be reformed if the drive has been stored for two years. See the table on page *20* for how to find out the manufacturing time from the serial number. For information on reforming the capacitors, refer to *Guide for Capacitor Reforming in ACS50, ACS55, ACS150, ACS350, ACS550 and ACH550* [3AFE68735190 (English)], available on the internet (go to http://www.abb.com and enter the code in the Search field.

Control panel

Cleaning

Use a soft damp cloth to clean the control panel. Avoid harsh cleaners which could scratch the display window.

Technical data

What this chapter contains

The chapter contains the technical specifications of the drive, e.g. the ratings, sizes and technical requirements as well as provisions for fulfilling the requirements for CE and other marks.

Ratings

Current and power

The current and power ratings are given below. The symbols are described below the table.

Type	Input	Output					Frame size
ACS150-	I_{1N}	I_{2N}	$I_{2,1min/10min}$	I_{2max}	P_N		
x = E/U[1]	A	A	A	A	kW	HP	
1-phase U_N = 200…240 V (200, 208, 220, 230, 240 V)							
01x-02A4-2	6.1	2.4	3.6	4.2	0.37	0.5	R0
01x-04A7-2	11.4	4.7	7.1	8.2	0.75	1	R1
01x-06A7-2	16.1	6.7	10.1	11.7	1.1	1.5	R1
01x-07A5-2	16.8	7.5	11.3	13.1	1.5	2	R2
01x-09A8-2	21.0	9.8	14.7	17.2	2.2	3	R2
3-phase U_N = 200…240 V (200, 208, 220, 230, 240 V)							
03x-02A4-2	3.6	2.4	3.6	4.2	0.37	0.5	R0
03x-03A5-2	5.0	3.5	5.3	6.1	0.55	0.75	R0
03x-04A7-2	6.7	4.7	7.1	8.2	0.75	1	R1
03x-06A7-2	9.4	6.7	10.1	11.7	1.1	1.5	R1
03x-07A5-2	9.8	7.5	11.3	13.1	1.5	2	R1
03x-09A8-2	11.8	9.8	14.7	17.2	2.2	3	R2
3-phase U_N = 380…480 V (380, 400, 415, 440, 460, 480 V)							
03x-01A2-4	2.2	1.2	1.8	2.1	0.37	0.5	R0
03x-01A9-4	3.6	1.9	2.9	3.3	0.55	0.75	R0
03x-02A4-4	4.1	2.4	3.6	4.2	0.75	1	R1
03x-03A3-4	6.0	3.3	5.0	5.8	1.1	1.5	R1
03x-04A1-4	6.9	4.1	6.2	7.2	1.5	2	R1
03x-05A6-4	9.6	5.6	8.4	9.8	2.2	3	R1
03x-07A3-4	11.6	7.3	11.0	12.8	3	3	R1
03x-08A8-4	13.6	8.8	13.2	15.4	4	5	R1

00353783.xls E

[1] E=EMC filter connected, U=EMC filter disconnected. Metal EMC filter screw is installed in “E” versions and plastic screw in “U” versions.

Symbols

Input	
I_{1N}	continuous rms input current
Output	
I_{2N}	continuous rms current. 50% overload is allowed for one minute every ten minutes.
$I_{2,1min/10min}$	maximum (50% overload) current allowed for one minute every ten minutes
I_{2max}	maximum output current. Available for two seconds at start, otherwise as long as allowed by the drive temperature.
P_N	typical motor power. The kilowatt ratings apply to most IEC 4-pole motors. The horsepower ratings apply to most NEMA 4-pole motors.

Sizing

The current ratings are the same regardless of the supply voltage within one voltage range. To achieve the rated motor power given in the table, the rated current of the drive must be higher than or equal to the rated motor current.

Note 1: The maximum allowed motor shaft power is limited to 1.5 · P_N. If the limit is exceeded, motor torque and current are automatically restricted. The function protects the input bridge of the drive against overload.

Note 2: The ratings apply at ambient temperature of 40°C (104°F).

Derating

The load capacity decreases if the installation site ambient temperature exceeds 40°C (104°F) or if the altitude exceeds 1000 meters (3300 ft).

Temperature derating

In the temperature range +40°C…+50°C (+104°F…+122°F), the rated output current is decreased by 1% for every additional 1°C (1.8°F). The output current is calculated by multiplying the current given in the rating table by the derating factor.

Example If the ambient temperature is 50°C (+122°F), the derating factor is 100% - 1 $\frac{\%}{°C}$ · 10°C = 90% or 0.90. The output current is then 0.90 · I_{2N}.

Altitude derating

In altitudes 1000…2000 m (3300…6600 ft) above sea level, the derating is 1% for every 100 m (330 ft).

Switching frequency derating

Derate according to the switching frequency used (see parameter *2606*)as follows:

Switching frequency	**Drive voltage rating**	
	U_N = 200…240 V	**U_N = 380…480 V**
4 kHz	No derating	No derating
8 kHz	Derate I_{2N} to 90%.	Derate I_{2N} to 75% for R0 or to 80% for R1 and R2.
12 kHz	Derate I_{2N} to 80%.	Derate I_{2N} to 50% for R0, or to 65% for R1 and R2, and derate maximum ambient temperature to 30°C (86°F).
16 kHz	Derate I_{2N} to 75%.	Derate I_{2N} to 50% and derate maximum ambient temperature to 30°C (86°F).

Ensure that parameter *2607* SWITCH FREQ CTRL = 1 (ON), which reduces the switching frequency if the drive's internal temperature is too high. See parameter *2607* for details.

Cooling air flow requirements

The table below specifies the heat dissipation in the main circuit at nominal load and in the control circuit with minimum load (I/O not in use) and maximum load (all digital inputs in the on state and the fan in use). The total heat dissipation is the sum of the heat dissipation in the main and control circuits.

Type ACS150- x = E/U	**Heat dissipation**						**Air flow**	
	Main circuit		**Control circuit**					
	Rated I_{1N} and I_{2N}		**Min**		**Max**			
	W	BTU/Hr	W	BTU/Hr	W	BTU/Hr	m^3/h	ft^3/min
1-phase U_N = 200…240 V (200, 208, 220, 230, 240 V)								
01x-02A4-2	25	85	6.3	22	12.3	42	-	-
01x-04A7-2	46	157	9.6	33	16.0	55	24	14
01x-06A7-2	71	242	9.6	33	16.0	55	24	14
01x-07A5-2	73	249	10.6	36	17.1	58	21	12
01x-09A8-2	96	328	10.6	36	17.1	58	21	12
3-phase U_N = 200…240 V (200, 208, 220, 230, 240 V)								
03x-02A4-2	19	65	6.3	22	12.3	42	-	-
03x-03A5-2	31	106	6.3	22	12.3	42	-	-
03x-04A7-2	38	130	9.6	33	16.0	55	24	14
03x-06A7-2	60	205	9.6	33	16.0	55	24	14
03x-07A5-2	62	212	9.6	33	16.0	55	21	12
03x-09A8-2	83	283	10.6	36	17.1	58	21	12
3-phase U_N = 380…480 V (380, 400, 415, 440, 460, 480 V)								
03x-01A2-4	11	38	6.7	23	13.3	45	-	-
03x-01A9-4	16	55	6.7	23	13.3	45	-	-
03x-02A4-4	21	72	10.0	34	17.6	60	13	8
03x-03A3-4	31	106	10.0	34	17.6	60	13	8
03x-04A1-4	40	137	10.0	34	17.6	60	13	8
03x-05A6-4	61	208	10.0	34	17.6	60	19	11
03x-07A3-4	74	253	14.3	49	21.5	73	24	14
03x-08A8-4	94	321	14.3	49	21.5	73	24	14

00353783.xls E

Power cable sizes and fuses

Cable dimensioning for rated currents (I_{1N}) is shown in the table below together with the corresponding fuse types for short-circuit protection of the input power cable. **The rated fuse currents given in the table are the maxima for the mentioned fuse types. If smaller fuse ratings are used, check that the fuse rms current rating is larger than the rated I_{1N} current given in the rating table on page** *113*. If 150% output power is needed, multiply current I_{1N} by 1.5. See also section *Selecting the power cables* on page *26*.

Check that the operating time of the fuse is below 0.5 seconds. The operating time depends on the fuse type, the supply network impedance as well as the cross-sectional area, material and length of the supply cable. In case the 0.5 seconds operating time is exceeded with the gG or T fuses, ultra rapid (aR) fuses will in most cases reduce the operating time to an acceptable level.

Note: Larger fuses must not be used.

Type ACS350- x = E/U	Fuses		Size of CU conductor in cablings							
	gG	UL Class T (600 V)	Supply (U1, V1, W1)		Motor (U2, V2, W2)		PE		Brake (BRK+ and BRK-)	
	A	A	mm^2	AWG	mm^2	AWG	mm^2	AWG	mm^2	AWG
1-phase U_N = 200…240 V (200, 208, 220, 230, 240 V)										
01x-02A4-2	10	10	2.5	14	0.75	18	2.5	14	2.5	14
01x-04A7-2	16	20	2.5	14	0.75	18	2.5	14	2.5	14
01x-06A7-2	16/20 [1)]	25	2.5	10	1.5	14	2.5	10	2.5	12
01x-07A5-2	20/25 [1)]	30	2.5	10	1.5	14	2.5	10	2.5	12
01x-09A8-2	25/35 [1)]	35	6	10	2.5	12	6	10	6	12
3-phase U_N = 200…240 V (200, 208, 220, 230, 240 V)										
03x-02A4-2	10	10	2.5	14	0.75	18	2.5	14	2.5	14
03x-03A5-2	10	10	2.5	14	0.75	18	2.5	14	2.5	14
03x-04A7-2	10	15	2.5	14	0.75	18	2.5	14	2.5	14
03x-06A7-2	16	15	2.5	12	1.5	14	2.5	12	2.5	12
03x-07A5-2	16	15	2.5	12	1.5	14	2.5	12	2.5	12
03x-09A8-2	16	20	2.5	12	2.5	12	2.5	12	2.5	12
03x-13A3-2	25	30	6	10	6	10	6	10	2.5	12
03x-17A6-2	25	35	6	10	6	10	6	10	2.5	12
03x-24A4-2	63	60	10	8	10	8	10	8	6	10
03x-31A0-2	80	80	16	6	16	6	16	6	10	8
03x-46A2-2	100	100	25	2	25	2	16	4	10	8
3-phase U_N = 380…480 V (380, 400, 415, 440, 460, 480 V)										
03x-01A2-4	10	10	2.5	14	0.75	18	2.5	14	2.5	14
03x-01A9-4	10	10	2.5	14	0.75	18	2.5	14	2.5	14
03x-02A4-4	10	10	2.5	14	0.75	18	2.5	14	2.5	14
03x-03A3-4	10	10	2.5	12	0.75	18	2.5	12	2.5	12
03x-04A1-4	16	15	2.5	12	0.75	18	2.5	12	2.5	12
03x-05A6-4	16	15	2.5	12	1.5	14	2.5	12	2.5	12
03x-07A3-4	16	20	2.5	12	1.5	14	2.5	12	2.5	12
03x-08A8-4	20	25	2.5	12	2.5	12	2.5	12	2.5	12
03x-12A5-4	25	30	6	10	6	10	6	10	2.5	12
03x-15A6-4	35	35	6	8	6	8	6	8	2.5	12
03x-23A1-4	50	50	10	8	10	8	10	8	6	10
03x-31A0-4	80	80	16	6	16	6	16	6	10	8
03x-38A0-4	100	100	16	4	16	4	16	4	10	8
03x-44A0-4	100	100	25	4	25	4	16	4	10	8

00353783.xls H

[1)] If 50% overload capacity is needed, use the bigger fuse alternative.

Power cables: terminal sizes, maximum cable diameters and tightening torques

Input power, motor cable and brake resistor terminal sizes, accepted cable diameters and tightening torques are given below.

Frame size	Max cable diameter for NEMA 1		U1, V1, V2, W2, BRK+ and BRK-				PE			
			Terminal size		Tightening torque		Clamp capacity		Tightening torque	
	mm	in.	mm^2	AWG	N·m	lbf in.	mm^2	AWG	N·m	lbf in.
R0	16	0.63	4.0/6.0	10	0.8	7	25	3	1.2	11
R1	16	0.63	4.0/6.0	10	0.8	7	25	3	1.2	11
R2	16	0.63	4.0/6.0	10	0.8	7	25	3	1.2	11

00353783.xls E

Dimensions, weights and noise

Dimensions, weights and noise are given below in separate tables for each degree of protection.

Frame size	Dimensions and weights												Noise
	IP20 (cabinet) / UL open												
	H1		H2		H3		W		D		Weight		Noise level
	mm	in.	mm	in.	mm	in.	mm	in.	mm	in.	kg	lb	dBA
R0	169	6.65	202	7.95	239	9.41	70	2.76	142	5.59	1.1	2.4	50
R1	169	6.65	202	7.95	239	9.41	70	2.76	142	5.59	1.3/1.2 [1]	2.9/2.6 [1]	60
R2	169	6.65	202	7.95	239	9.41	105	4.13	142	5.59	1.5	3.3	60

[1] U_N = 200…240 V: 1.3 kg / 2.9 lb, U_N = 380…480 V: 1.2 kg / 2.6 lb

00353783.xls E

Frame size	Dimensions and weights										Noise
	IP20 / NEMA 1										
	H4		H5		W		D		Weight		Noise level
	mm	in.	mm	in.	mm	in.	mm	in.	kg	lb	dBA
R0	257	10.12	280	11.02	70	2.76	142	5.59	1.5	3.3	50
R1	257	10.12	280	11.02	70	2.76	142	5.59	1.7/1.6 [2]	3.7/3.5 [2]	60
R2	257	10.12	282	11.10	105	4.13	142	5.59	1.9	4.2	60

[2] U_N = 200…240 V: 1.7 kg / 3.7 lb, U_N = 380…480 V: 1.6 kg / 3.5 lb

00353783.xls E

Symbols

IP20 (cabinet) / UL open

H1 height without fastenings and clamping plate

H2 height with fastenings, without clamping plate

H3 height with fastenings and clamping plate

IP20 / NEMA 1

H4 height with fastenings and connection box

H5 height with fastenings, connection box and hood

Input power connection

Voltage (U_1)	200/208/220/230/240 VAC 1-phase for 200 VAC drives 200/208/220/230/240 VAC 3-phase for 200 VAC drives 380/400/415/440/460/480 VAC 3-phase for 400 VAC drives Regular 10% variation from converter nominal voltage is allowed as default.
Short-circuit capacity	Maximum allowed prospective short-circuit current at the input power connection as defined in IEC 60439-1 is 100 kA. The drive is suitable for use in a circuit capable of delivering not more than 100 kA rms symmetrical amperes at the drive maximum rated voltage.
Frequency	50/60 Hz ± 5%, maximum rate of change 17%/s
Imbalance	Max. ±3% of nominal phase to phase input voltage
Fundamental power factor (cos phi$_1$)	0.98 (at nominal load)

Motor connection

Voltage (U_2)	0 to U_1, 3-phase symmetrical, U_{max} at the field weakening point
Short-circuit protection (IEC 61800-5-1, UL 508C)	The motor output is short-circuit proof by IEC 61800-5-1 and UL 508C.
Frequency	Scalar control: 0…500 Hz
Frequency resolution	0.01 Hz
Current	See section *Ratings* on page *113*.
Power limit	1.5 · P_N
Field weakening point	10…500 Hz
Switching frequency	4, 8, 12 or 16 kHz
Maximum recommended motor cable length	R0: 30 m (100 ft), R1…R2: 50 m (165 ft) With output chokes the motor cable length may be extended to 60 m (195 ft) for R0 and 100 m (330 ft) for R1…R2. To comply with the European EMC Directive, use the cable lengths specified in the table below for 4 kHz switching frequency. The lengths are given for using the drive with the internal EMC filter or an optional external EMC filter.

4 kHz switching frequency	Internal EMC filter	Optional external EMC filter
Second environment (category C3 [1])	30 m (100 ft)	30 m (100 ft)
First environment (category C2 [1])	-	30 m (100 ft)

[1] See the new terms in section *IEC/EN 61800-3 (2004) Definitions* on page *123*.

Control connections

Analog input GND	Voltage signal, unipolar Current signal, unipolar	0 (2)…10 V, R_{in} > 312 kohm 0 (4)…20 mA, R_{in} = 100 ohm
	Potentiometer reference value (+10V) Resolution Accuracy	10 V ± 1%, max. 10 mA, *R* < 10 kohm 0.1% ±1%
Auxiliary voltage +24V		24 VDC ± 10%, max. 200 mA
Digital inputs DI1...DI5 (frequency input DI5)	Voltage Type Frequency input Input impedance	12…24 VDC with internal or external supply PNP and NPN Pulse train 0…16 kHz (DI5 only) 2.4 kohm
Relay output COM, NC, NO	Type Max. switching voltage Max. switching current Max. continuous current	NO + NC 250 VAC / 30 VDC 0.5 A / 30 VDC; 5 A / 230 VAC 2 A rms
Wire size	Relay connections	1.5...0.20 mm^2 16...24 AWG
	I/O connections	1... 0.14$mm^2$16...26 AWG
Torque	Relay connections	0.5 N·m / 4.4 lbf in.
	I/O connections	0.22 N·m / 2 lbf in.

Brake resistor connection

Short-circuit protection (IEC 61800-5-1, IEC 60439-1, UL 508C)	The brake resistor output is conditionally short-circuit proof by IEC/EN 61800-5-1 and UL 508C. For correct fuse selection, contact your local ABB representative. Rated conditional short-circuit current as defined in IEC 60439-1 and the Short-circuit test current by UL 508C is 100 kA.

Efficiency

Approximately 95 to 98% at nominal power level, depending on the drive size and options

Cooling

Method	R0: Natural convection cooling. R1…R2: Internal fan, flow direction from bottom to top.
Free space around the drive	See chapter *Mechanical installation*, page *21*.

Degrees of protection

IP20 (cabinet installation) / UL open: Standard enclosure. The drive must be installed in a cabinet to fulfil the requirements for shielding from contact.

IP20 / NEMA 1: Achieved with an option kit including a hood and a connection box.

Ambient conditions

Environmental limits for the drive are given below. The drive is to be used in a heated indoor controlled environment.

	Operation installed for stationary use	**Storage** in the protective package	**Transportation** in the protective package
Installation site altitude	0 to 2000 m (6600 ft) above sea level [above 1000 m (3300 ft), see section *Derating* on page *114*]	-	-
Air temperature	-10 to +50°C (14 to 122°F). No frost allowed. See section *Derating* on page *114*.	-40 to +70°C (-40 to +158°F)	-40 to +70°C (-40 to +158°F)
Relative humidity	0 to 95%	Max. 95%	Max. 95%
	No condensation allowed. Maximum allowed relative humidity is 60% in the presence of corrosive gases.		
Contamination levels (IEC 60721-3-3, IEC 60721-3-2, IEC 60721-3-1)	No conductive dust allowed.		
	According to IEC 60721-3-3, chemical gases: Class 3C2 solid particles: Class 3S2. The ACS150 must be installed in clean air according to enclosure classification. Cooling air must be clean, free from corrosive materials and electrically conductive dust.	According to IEC 60721-3-1, chemical gases: Class 1C2 solid particles: Class 1S2	According to IEC 60721-3-2, chemical gases: Class 2C2 solid particles: Class 2S2
Sinusoidal vibration (IEC 60721-3-3)	Tested according to IEC 60721-3-3, mechanical conditions: Class 3M4 2…9 Hz, 3.0 mm (0.12 in.) 9…200 Hz, 10 m/s^2 (33 ft/s^2)	-	-
Shock (IEC 60068-2-27, ISTA 1A)	-	According to ISTA 1A. Max. 100 m/s^2 (330 ft/s^2), 11 ms.	According to ISTA 1A. Max. 100 m/s^2 (330 ft/s^2), 11 ms.
Free fall	Not allowed	76 cm (30 in.)	76 cm (30 in.)

Materials

Drive enclosure

- PC/ABS 2 mm, PC+10%GF 2.5…3 mm and PA66+25%GF 1.5 mm, all in color NCS 1502-Y (RAL 9002 / PMS 420 C)
- hot-dip zinc coated steel sheet 1.5 mm, thickness of coating 20 micrometers
- extruded aluminium AlSi.

Package

Corrugated cardboard.

Disposal

The drive contains raw materials that should be recycled to preserve energy and natural resources. The package materials are environmentally compatible and recyclable. All metal parts can be recycled. The plastic parts can either be recycled or burned under controlled circumstances, according to local regulations. Most recyclable parts are marked with recycling marks.

If recycling is not feasible, all parts excluding electrolytic capacitors and printed circuit boards can be landfilled. The DC capacitors contain electrolyte, which is classified as hazardous waste within the EU. They must be removed and handled according to local regulations.

For further information on environmental aspects and more detailed recycling instructions, please contact your local ABB distributor.

Applicable standards

	The drive complies with the following standards:
• IEC/EN 61800-5-1 (2003)	Electrical, thermal and functional safety requirements for adjustable frequency a.c. power drives
• IEC/EN 60204-1 (1997) + Amendment A1 (1999)	Safety of machinery. Electrical equipment of machines. Part 1: General requirements. *Provisions for compliance:* The final assembler of the machine is responsible for installing - an emergency-stop device - a supply disconnecting device.
• IEC/EN 61800-3 (2004)	Adjustable speed electrical power drive systems. Part 3: EMC requirements and specific test methods
• UL 508C	UL Standard for Safety, Power Conversion Equipment, third edition.

CE marking

See the type designation label for the valid markings of your drive.

A CE mark is attached to the drive to verify that the drive follows the provisions of the European Low Voltage and EMC Directives (Directive 73/23/EEC, as amended by 93/68/EEC, and Directive 89/336/EEC, as amended by 93/68/EEC).

Compliance with the EMC Directive

The EMC Directive defines the requirements for immunity and emissions of electrical equipment used within the European Union. The EMC product standard [EN 61800-3 (2004)] covers requirements stated for drives.

Compliance with EN 61800-3 (2004)

See page *124*.

C-Tick marking

See the type designation label for the valid markings of your drive.

C-Tick marking is required in Australia and New Zealand. A C-Tick mark is attached to the drive to verify compliance with the relevant standard (IEC 61800-3 (2004) – Adjustable speed electrical power drive systems – Part 3: EMC product standard including specific test methods), mandated by the Trans-Tasman Electromagnetic Compatibility Scheme.

The Trans-Tasman Electromagnetic Compatibility Scheme (EMCS) was introduced by the Australian Communication Authority (ACA) and the Radio Spectrum Management Group (RSM) of the New Zealand Ministry of Economic Development (NZMED) in November 2001. The aim of the scheme is to protect the radio frequency spectrum by introducing technical limits for emission from electrical/electronic products.

Compliance with IEC 61800-3 (2004)

See page *124*.

RoHS marking

See the type designation label for the valid markings of your drive.

The RoHS mark is attached to the drive to verify that drive follows the provisions of the European RoHS directive. RoHS = the restriction of the use of hazardous substances in electrical and electronic equipment.

UL marking

See the type designation label for the valid markings of your drive.

UL checklist

Input power connection – See section *Input power connection* on page *119*.

Disconnecting device (disconnecting means) – See section *Supply disconnecting device* on page *23*.

Ambient conditions – The drives are to be used in a heated indoor controlled environment. See section *Ambient conditions* on page *121* for specific limits.

Input cable fuses – For installation in the United States, branch circuit protection must be provided in accordance with the National Electrical Code (NEC) and any applicable local codes. To fulfil this requirement, use the UL classified fuses given in section *Power cable sizes and fuses* on page *116*.

For installation in Canada, branch circuit protection must be provided in accordance with Canadian Electrical Code and any applicable provincial codes. To fulfil this requirement, use the UL classified fuses given in section *Power cable sizes and fuses* on page *116*.

Power cable selection – See section *Selecting the power cables* on page *26*.

Power cable connections – For the connection diagram and tightening torques, see section *Connecting the power cables* on page *32*.

Overload protection – The drive provides overload protection in accordance with the National Electrical Code (US).

Braking – The drive has an internal brake chopper. When applied with appropriately sized brake resistors, the brake chopper will allow the drive to dissipate regenerative energy (normally associated with quickly decelerating a motor). Brake resistor selection is discussed in section *Brake resistors* on page *125*.

IEC/EN 61800-3 (2004) Definitions

EMC stands for **E**lectro**m**agnetic **C**ompatibility. It is the ability of electrical/electronic equipment to operate without problems within an electromagnetic environment. Likewise, the equipment must not disturb or interfere with any other product or system within its locality.

First environment includes establishments connected to a low-voltage network which supplies buildings used for domestic purposes.

Second environment includes establishments connected to a network not directly supplying domestic premises.

Drive of category C2: drive of rated voltage less than 1000 V and intended to be installed and commissioned only by a professional when used in the first environment. **Note:** A professional is a person or organisation having necessary skills in installing and/or commissioning power drive systems, including their EMC aspects.

Category C2 has the same EMC emission limits as the earlier class first environment restricted distribution. EMC standard IEC/EN 61800-3 does not any more restrict the distribution of the drive, but the using, installation and commissioning are defined.

Drive of category C3: drive of rated voltage less than 1000 V, intended for use in the second environment and not intended for use in the first environment.

Category C3 has the same EMC emission limits as the earlier class second environment unrestricted distribution.

Compliance with the IEC/EN 61800-3 (2004)

The immunity performance of the drive complies with the demands of IEC/EN 61800-3, second environment (see page 123 for IEC/EN 61800-3 definitions). The emission limits of IEC/EN 61800-3 are complied with the provisions described below.

First environment (drives of category C2)

1. The optional EMC filter is selected according to the ABB documentation and installed as specified in the EMC filter manual.
2. The motor and control cables are selected as specified in this manual.
3. The drive is installed according to the instructions given in this manual.
4. Motor cable length maximum of 30 m (100 ft) with 4 kHz switching frequency.

WARNING! In a domestic environment, this product may cause radio inference, in which case supplementary mitigation measures may be required.

Second environment (drives of category C3)

1. The internal EMC filter is connected (the screw at EMC is in place) or the optional EMC filter is installed.
2. The motor and control cables are selected as specified in this manual.
3. The drive is installed according to the instructions given in this manual.
4. With the internal EMC filter: motor cable length 30 m (100 ft) with 4 kHz switching frequency.
   With the optional external filter: motor cable length 30 m (100 ft) with 4 kHz switching frequency.

WARNING! A drive of category C3 is not intended to be used on a low-voltage public network which supplies domestic premises. Radio frequency interference is expected if the drive is used on such a network.

Note: It is not allowed to install a drive with the internal EMC filter connected on IT (ungrounded) systems. The supply network becomes connected to ground potential through the EMC filter capacitors which may cause danger or damage the drive.

Note: It is not allowed to install a drive with the internal EMC filter connected on a corner grounded TN system as this would damage the drive.

Product protection in the USA

This product is protected by one or more of the following US patents:

4,920,306	5,301,085	5,463,302	5,521,483	5,532,568	5,589,754
5,612,604	5,654,624	5,799,805	5,940,286	5,942,874	5,952,613
6,094,364	6,147,887	6,175,256	6,184,740	6,195,274	6,229,356
6,252,436	6,265,724	6,305,464	6,313,599	6,316,896	6,335,607
6,370,049	6,396,236	6,448,735	6,498,452	6,552,510	6,597,148
6,600,290	6,741,059	6,774,758	6,844,794	6,856,502	6,859,374
6,922,883	6,940,253	6,934,169	6,956,352	6,958,923	6,967,453
6,972,976	6,977,449	6,984,958	6,985,371	6,992,908	6,999,329
7,023,160	7,034,510	7,036,223	7,045,987	7,057,908	7,059,390
7,067,997	7,082,374	7,084,604	7,098,623	7,102,325	7,109,780
7,164,562	7,176,779	7,190,599	7,215,099	7,221,152	7,227,325
7,245,197	7,262,577	D503,931	D510,319	D510,320	D511,137
D511,150	D512,026	D512,696	D521,466	D541,743S	
D541,744S	D541,745S	D548,182	D548,183		

Other patents pending.

Brake resistors

ACS150 drives have an internal brake chopper as standard equipment. The brake resistor is selected using the table and equations presented in this section.

Brake resistor selection

1. Determine the required maximum braking power P_{Rmax} for the application. P_{Rmax} must be smaller than P_{BRmax} given in the table on page *126* for the used drive type.
2. Calculate resistance R with Equation 1.
3. Calculate energy E_{Rpulse} with Equation 2.
4. Select the resistor so that the following conditions are met:
   - The rated power of the resistor must be greater than or equal to P_{Rmax}.
   - Resistance R must be between R_{min} and R_{max} given in the table for the used drive type.
   - The resistor must be able to dissipate energy E_{Rpulse} during the braking cycle T.

Equations for selecting the resistor:

Eq. 1. $U_N = 200\ldots240\text{ V}$: $R = \dfrac{150000}{P_{Rmax}}$

$U_N = 380\ldots415\text{ V}$: $R = \dfrac{450000}{P_{Rmax}}$

$U_N = 415\ldots480\text{ V}$: $R = \dfrac{615000}{P_{Rmax}}$

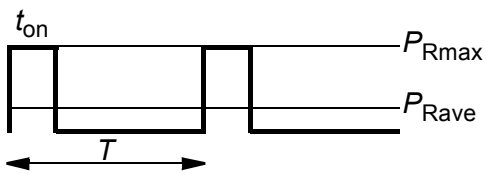

Eq. 2. $E_{Rpulse} = P_{Rmax} \cdot t_{on}$

Eq. 3. $P_{Rave} = P_{Rmax} \cdot \dfrac{t_{on}}{T}$

For conversion, use 1 HP = 746 W.

where
R = selected brake resistor value (ohm)
P_{Rmax} = maximum power during the braking cycle (W)
P_{Rave} = average power during the braking cycle (W)
E_{Rpulse} = energy conducted into the resistor during a single braking pulse (J)
t_{on} = length of the braking pulse (s)
T = length of the braking cycle (s).

Type ACS150-	R_{min} ohm	R_{max} ohm	P_{BRmax} kW	P_{BRmax} HP
1-phase U_N = 200…240 V (200, 208, 220, 230, 240 V)				
01x-02A4-2	70	390	0.37	0.5
01x-04A7-2	40	200	0.75	1
01x-06A7-2	40	130	1.1	1.5
01x-07A5-2	30	100	1.5	2
01x-09A8-2	30	70	2.2	3
3-phase U_N = 200…240 V (200, 208, 220, 230, 240 V)				
03x-02A4-2	70	390	0.37	0.5
03x-03A5-2	70	260	0.55	0.75
03x-04A7-2	40	200	0.75	1
03x-06A7-2	40	130	1.1	1.5
03x-07A5-2	30	100	1.5	2
03x-09A8-2	30	70	2.2	3
3-phase U_N = 380…480 V (380, 400, 415, 440, 460, 480 V)				
03x-01A2-4	200	1180	0.37	0.5
03x-01A9-4	175	800	0.55	0.75
03x-02A4-4	165	590	0.75	1
03x-03A3-4	150	400	1.1	1.5
03x-04A1-4	130	300	1.5	2
03x-05A6-4	100	200	2.2	3
03x-07A3-4	70	150	3.0	3
03x-08A8-4	70	110	4.0	5

00353783.xls E

R_{min} = minimum allowed brake resistor
R_{max} = maximum allowed brake resistor
P_{BRmax} = maximum braking capacity of the drive, must exceed the desired braking power.

WARNING! Never use a brake resistor with a resistance below the minimum value specified for the particular drive. The drive and the internal chopper are not able to handle the overcurrent caused by the low resistance.

Resistor installation and wiring

All resistors must be installed in a place where they will cool.

WARNING! The materials near the brake resistor must be non-flammable. The surface temperature of the resistor is high. Air flowing from the resistor is of hundreds of degrees Celsius. Protect the resistor against contact.

Use a shielded cable with the same conductor size as for drive input cabling (see section *Power cables: terminal sizes, maximum cable diameters and tightening torques on page 118*). For short-circuit protection of the brake resistor connection, see *Brake resistor connection* on page *120*. Alternatively, a two-conductor shielded cable with the same cross-sectional area can be used. The maximum length of the resistor cable(s) is 5 m (16 ft). For the connections, see the power connection diagram of the drive on page *32*.

Mandatory circuit protection

The following setup is essential for safety – it interrupts the main supply in fault situations involving chopper shorts:

- Equip the drive with a main contactor.
- Wire the contactor so that it opens if the resistor thermal switch opens (an overheated resistor opens the contactor).

Below is a simple wiring diagram example.

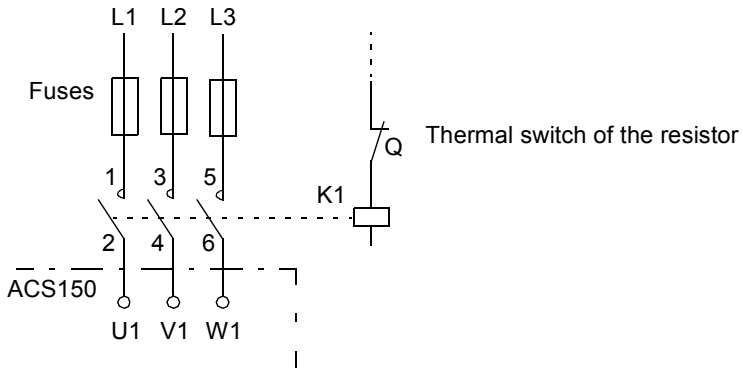

Parameter set-up

To enable resistor braking, switch off the drive's overvoltage control by setting parameter *2005* to 0 (DISABLE).

Dimensions

Dimensional drawings of the ACS150 are shown below. The dimensions are given in millimeters and [inches].

Frame sizes R0 and R1, IP20 (cabinet installation) / UL open

R1 and R0 are identical except for the fan at the top of R1.

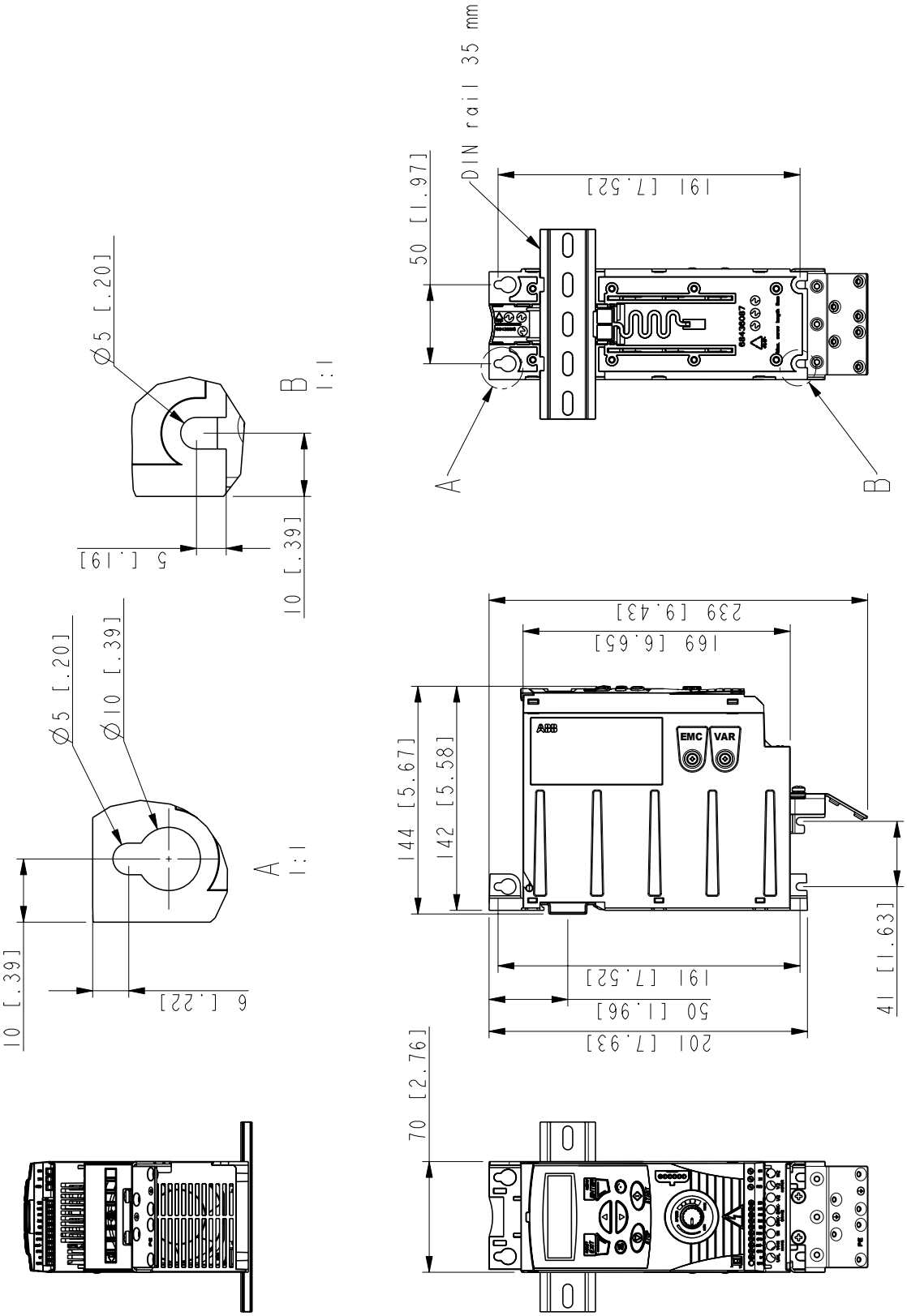

Frame sizes R0 and R1, IP20 / NEMA 1

R1 and R0 are identical except for the fan at the top of R1.

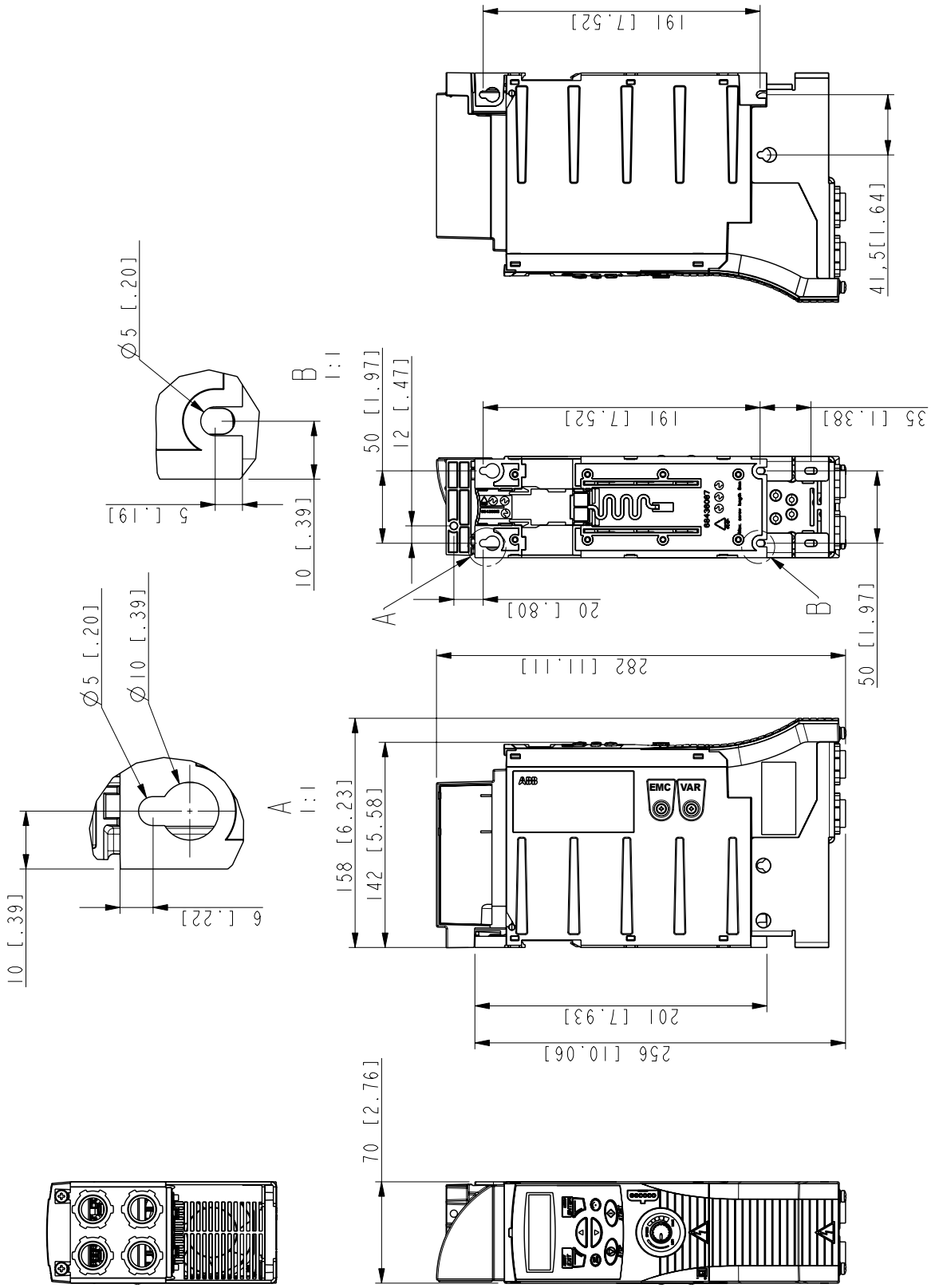

Frame sizes R0 and R1, IP20 / NEMA 1

3AFE68637929-A

Frame size R2, IP20 (cabinet installation) / UL open

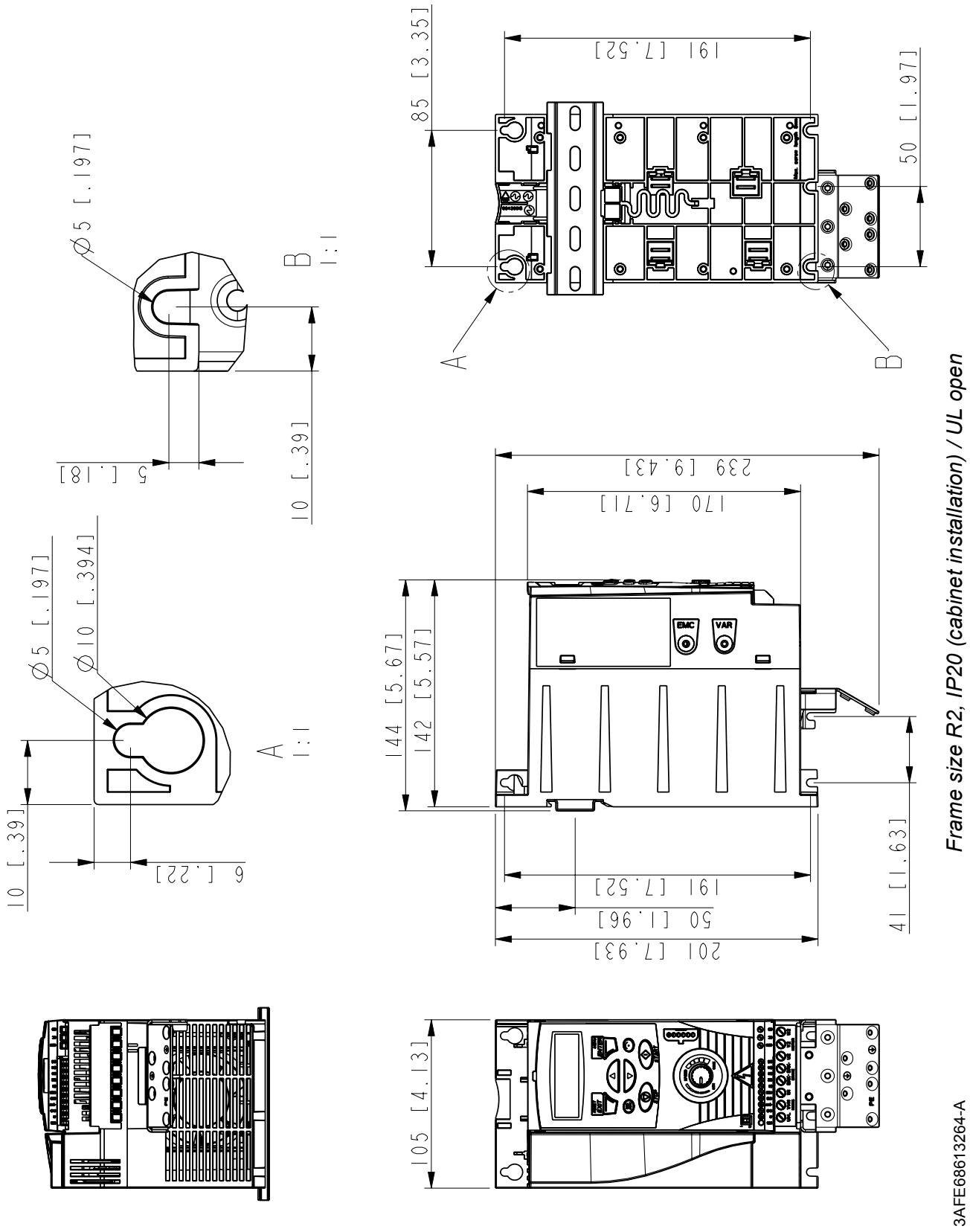

Frame size R2, IP20 (cabinet installation) / UL open

Frame size R2, IP20 / NEMA 1

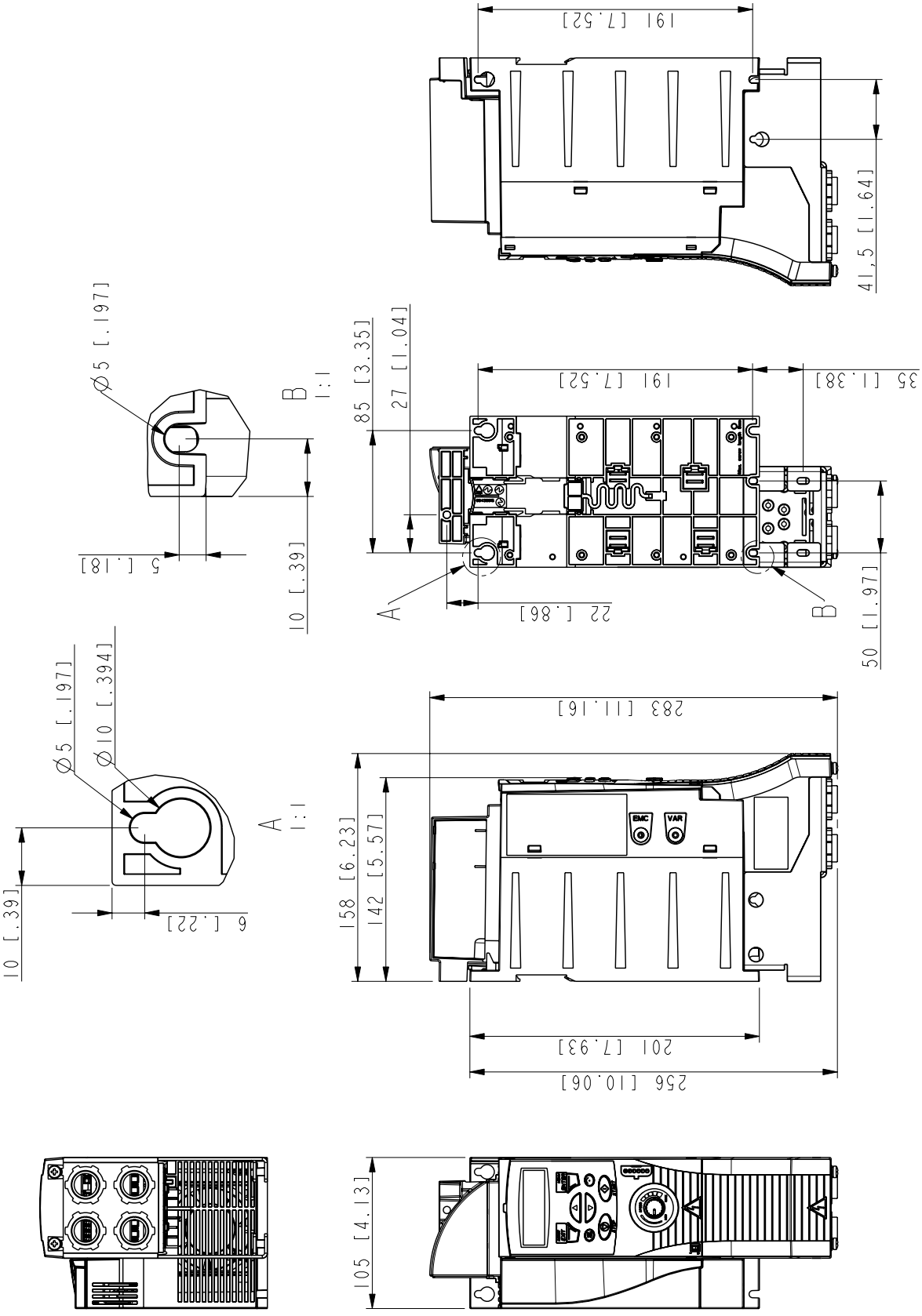

Frame size R2, IP20 / NEMA 1

3AFE68633931-A

ABB Limited
Daresbury Park
Daresbury
Warrington
Cheshire
WA4 4BT
UNITED KINGDOM
Telephone +44 1925 741111
Fax +44 1925 741212

3AFE68576032 Rev B / EN
EFFECTIVE: 12.9.2007

ABB Oy
AC Drives
P.O. Box 184
FI-00381 HELSINKI
FINLAND
Telephone +358 10 22 11
Fax +358 10 22 22681
Internet http://www.abb.com

ABB Inc.
Automation Technologies
Drives & Motors
16250 West Glendale Drive
New Berlin, WI 53151
USA
Telephone +1 262 785-3200
+1 800-HELP-365
Fax +1 262 780-5135

ABB Beijing Drive Systems Co. Ltd.
No. 1, Block D, A-10 Jiuxianqiao Beilu
Chaoyang District
Beijing, P.R. China, 100015
Telephone +86 10 5821 7788
Fax +86 10 5821 7618
Internet http://www.abb.com